SINKHOLE DETAILS

SINKHOLE DETAILS: LIST OF DRAWINGS

DT 01/SH SINKHOLE STABILISATION INVERTED FILTER METHOD.

DT 02/SH SINKHOLE REHABILITATION SMALL TO LARGE COMPACTORS USED INVERTED FILTER METHOD.

DT 03/SH SINKHOLE REHABILITATION DYNAMIC COMPACTION

DT 04/SH DOLINE REHABILITATION DYNAMIC COMPACTION

DT 05/SH DOLINE REHABILITATION CONVENTIONAL COMPACTION.

DT 06/SH FILLING OF LOW LAYING AREAS (OPEN AREAS).

DT 07/SH SETTING OUT GRID FOR DYNAMIC COMPACTION (PLAN)

DT 08/SH EARTH WORKS TO IMPROVE STORMWATER DRAINAGE IN TRAFFICKED AREAS.

DEPARTMENT OF PUBLIC WORKS
Private Bag X65
Pretoria
0001
Tel (012) 337 2000

departmental
DIAGRAMMATIC CIVIL ENGINEERING DETAILS FOR DOLOMITIC SOILS

title
DRAWING LIST.

scale
.

date
30-09-2017

drawing number / type number
TYPE NO DT 00/SH

1. TOP SELECTED FILLING:
   -150mm LAYERS COMPACTED WITH WALK BEHIND COMPACTOR (90mm) TO 95% OF MOD AASHTO MAXIMUM DRY DENSITY AT OPTIMUM MOISTURE CONTENT.
   -SILTY SAND OR CLAY (PARTICLE SIZE 1,55mm AND SMALLER)

2. LOWER SELECTED FILLING:
   -150mm LAYERS COMPACTED WITH WALK BEHIND COMPACTOR (90mm) TO 95% OF MOD AASHTO MAXIMUM DRY DENSITY AT OPTIMUM MOISTURE CONTENT.
   -MAXIMUM COARSE MATERIAL SIZE NOT TO EXCEED 63mm IN DIAMETER.

3. BULK FILLING (UNCONTROLED COMPACTION):
   -200mm LAYERS COMPACTED WITH TAMPING OF 32 TON EXCAVATOR BUCKET OR SIMILAR.
   -MATERIAL TO BE TYPE G8 WITH MAXIMUM SIZE OF MATERIAL NOT EXCEEDING 125mm IN DIAMETER.

4. CHOKING OF SINKHOLE THROAT:
   -TYPE 1. BOULDERS OF 500mm ø OR LARGER FOR OPEN THROAT.
   -TYPE 2. BOULDERS OR BUILDING RUBBLE UP TO 400mm ø MIXED WITH 30% SOIL FINES.
   -COMPACT TYPE 1 AND TYPE 2 WITH EXCAVATOR BUCKET.
   -TYPE 3. REINFORCED CONCRETE SLAB (20MPa/19mm).
   -TYPE 4. PUMP 1:15 CEMENT:SOIL MIX INTO THROAT.
   -TYPE OF CHOKING TO BE DETERMINED BY ENGINEER AFTER EXCAVATION OF SINKHOLE FLOOR.

NOTE:
PC. AND PA. REFER TO PARTICULAR SPECIFICATIONS.

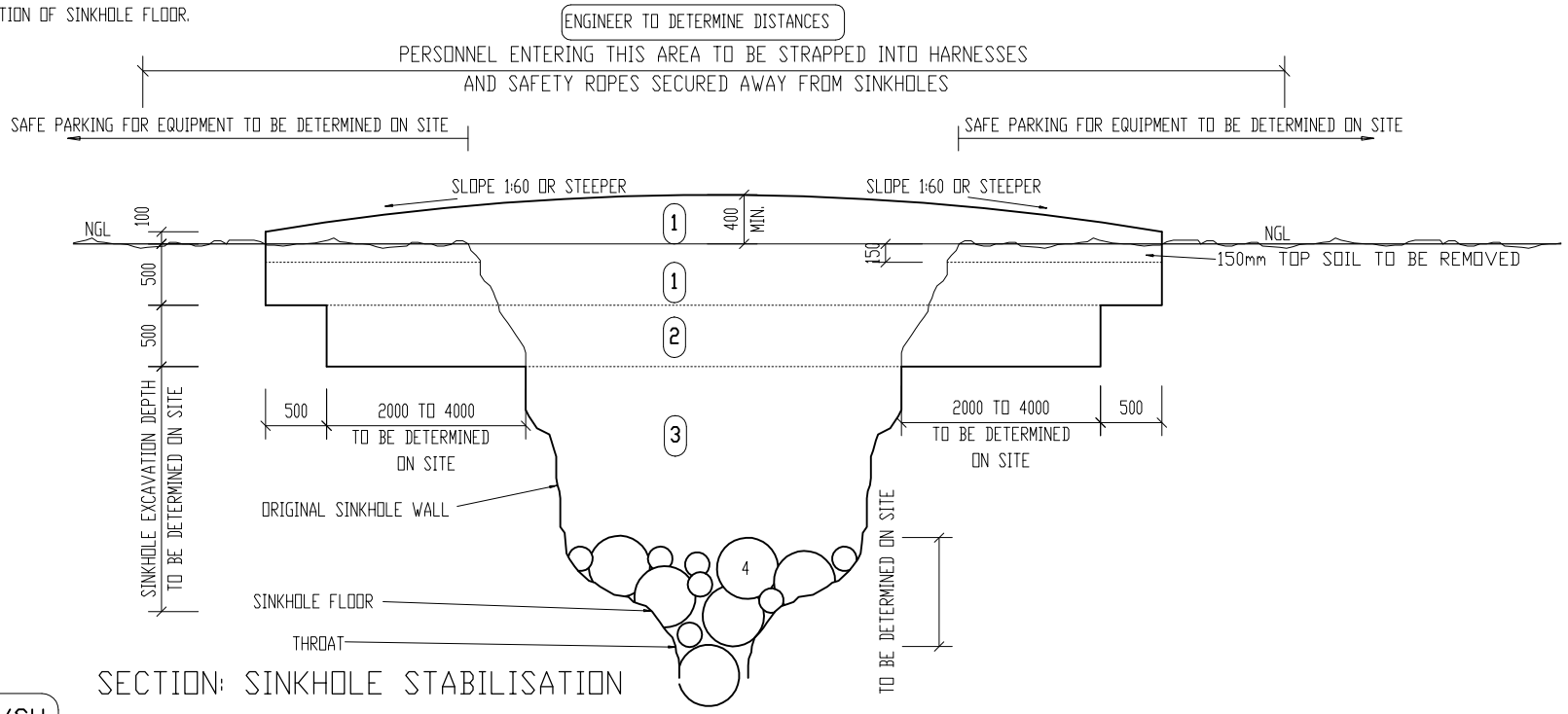

SECTION: SINKHOLE STABILISATION
INVERTED FILTER METHOD

DT 01/SH

DEPARTMENT OF PUBLIC WORKS
Private Bag X65
Pretoria
0001
Tel (012) 337 2000

departmental
DIAGRAMMATIC CIVIL ENGINEERING DETAILS FOR DOLOMITIC SOILS

project
SINKHOLE STABILISATION INVERTED FILTER METHOD (DIAGRAMMATIC)

scale
1 : 60

date
2017/09/30

drawing number / type number
TYPE NO DT 01/SH

1. TOP SELECTED FILLING:
   - 150mm LAYERS COMPACTED TO 95% OF MOD AASHTO MAXIMUM DRY DENSITY AT OPTIMUM MOISTURE CONTENT.
   - SILTY SAND OR CLAY (PARTICLE SIZE 1,55mm AND SMALLER)

2. LOWER SELECTED FILLING:
   - 150mm LAYERS COMPACTED TO 95% OF MOD AASHTO MAXIMUM DRY DENSITY AT OPTIMUM MOISTURE CONTENT.
   - MAXIMUM COARSE MATERIAL SIZE NOT TO EXCEED 63mm Ø.

3. BULK FILLING:
   - 200mm LAYERS COMPACTED TO 95% OF MOD AASHTO MAXIMUM DRY DENSITY AT OPTIMUM MOISTURE CONTENT. OR A DENSITY LESS PREMEABLE THAN THE SURROUNDING SOIL WHICHEVER IS THE HIGHER.
   - MATERIAL TO BE TYPE G8 WITH MAXIMUM SIZE OF MATERIAL NOT EXCEEDING 125mm IN DIAMETER.

4. CHOKING OF SINKHOLE THROAT:
   - TYPE 1. BOULDERS OF 500mm [OR LARGER FOR OPEN THROAT.
   - TYPE 2. BOULDERS OR BUILDING RUBBLE UP TO 400mm Ø MIXED WITH 30% SOIL FINES.
   - COMPACT TYPE 1 AND TYPE 2 WITH EXCAVATOR BUCKET.
   - TYPE 3. REINFORCED CONCRETE SLAB (20MPa/19mm).
   - TYPE 4. PUMP 1:15 CEMENT:SOIL MIX INTO THROAT.
   - TYPE OF CHOKING TO BE DETERMINED BY ENGINEER AFTER EXCAVATION OF SINKHOLE FLOOR.

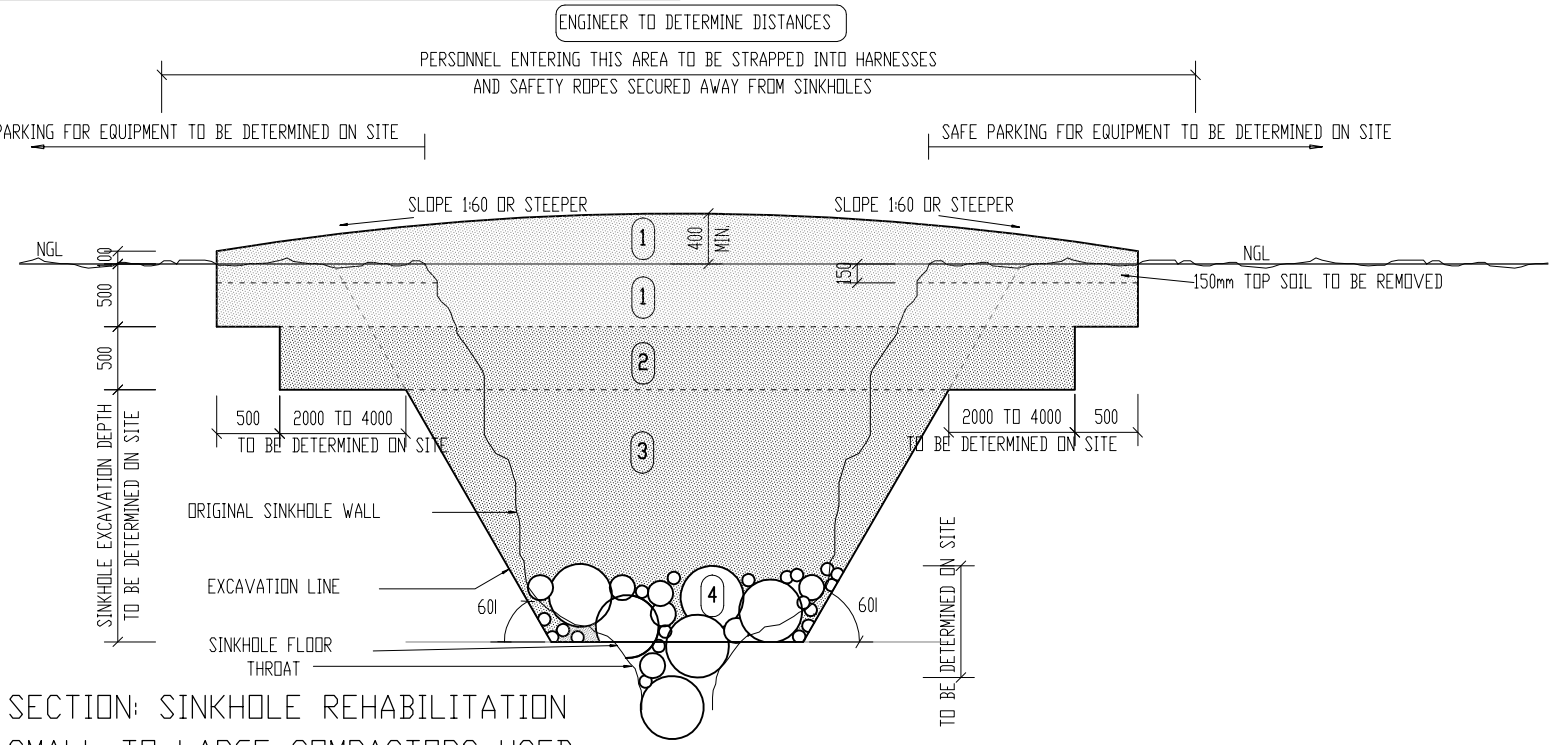

SECTION: SINKHOLE REHABILITATION
SMALL TO LARGE COMPACTORS USED.
INVERTED FILTER METHOD

DT 02/SH

DEPARTMENT OF PUBLIC WORKS
Private Bag X65
Pretoria
0001
Tel (012) 337 2000

departmental
DIAGRAMMATIC CIVIL ENGINEERING DETAILS FOR DOLOMITIC SOILS

title
SINKHOLE REHABILITATION SMALL TO LARGE COMPACTORS USED. INVERTED FILTER METHOD (DIAGRAMMATIC)

scale
1 : 60

date
2017/09/30

drawing number / type number
TYPE NO DT 02/SH

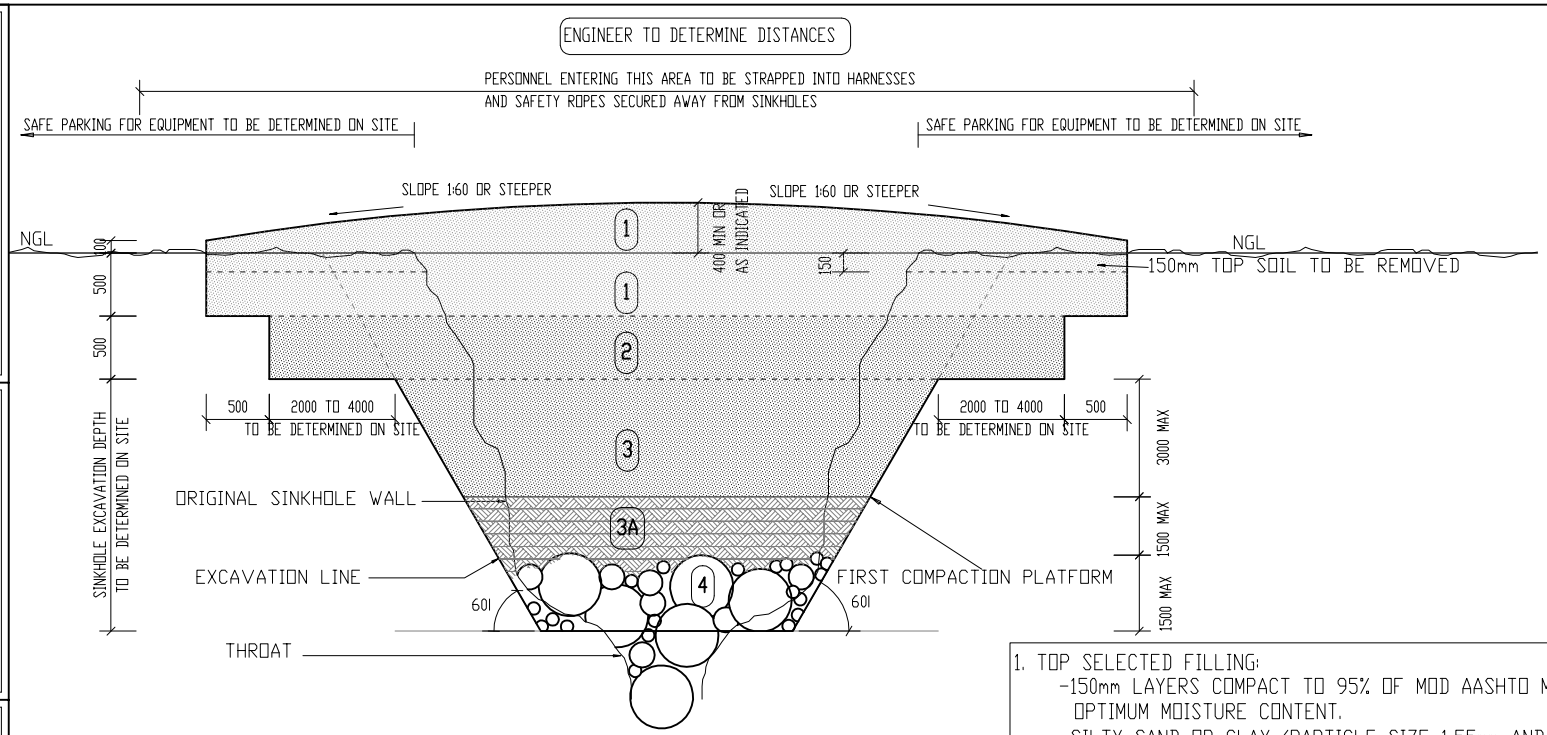

SECTION:
SINKHOLE REHABILITATION
DYNAMIC COMPACTION.

1. TOP SELECTED FILLING:
   - 150mm LAYERS COMPACT TO 95% OF MOD AASHTO MAXIMUM DRY DENSITY AT OPTIMUM MOISTURE CONTENT.
   - SILTY SAND OR CLAY (PARTICLE SIZE 1,55mm AND SMALLER)

2. DYNAMIC COMPACTION FINISHING PLATFORM:
   - LAST 0,5m UNCOMPACTED LAYER OF COARSE MATERIAL, SIZE NOT TO EXCEED 63mm Ø.
   - DYNAMIC COMPACTION, CONSISTING OF PRIMARY, SECONDARY AND FINISHING COMPACTION.

3. DYNAMIC COMPACTION BULK FILLING PLATFORMS:
   - FILL IN 3m UNCOMPACTED LAYERS OF TYPE G8 MATERIAL WITH MAXIMUM SIZE OF COARSE MATERIAL NOT EXCEEDING 125mm IN DIAMETER.
   - DYNAMIC COMPACTION, CONSISTING OF PRIMARY AND SECONDARY COMPACTION.

3A. FIRST COMPACTION PLATFORM:
   - MATERIAL FROM EXCAVATION OF SINKHOLE SIDE WALLS LEVELLED OFF IN BASE WITH EXCAVATOR BUCKET.
   - DYNAMIC COMPACTION, CONSISTING OF PRIMARY AND SECONDARY COMPACTION.

4. CHOKING OF SINKHOLE THROAT:
   - TYPE 1. BOULDERS OF 500mm Ø OR LARGER FOR OPEN THROAT.
   - TYPE 2. BOULDERS OR BUILDING RUBBLE UP TO 400mm Ø MIXED WITH 30% SOIL FINES.
   - TYPE OF CHOKING TO BE DETERMINED BY ENGINEER.

NOTE:
PC. AND PA. REFER TO PARTICULAR SPECIFICATION.

DT 03/SH

DEPARTMENT OF PUBLIC WORKS
Private Bag X65
Pretoria
0001
Tel (012) 337 2000

departmental
DIAGRAMMATIC CIVIL ENGINEERING DETAILS FOR DOLOMITIC SOILS

title
SINKHOLE REHABILITATION DYNAMIC COMPACTION. (DIAGRAMMATIC)

scale
1 : 60

date
2017/09/30

drawing number / type number
TYPE NO DT 03/SH

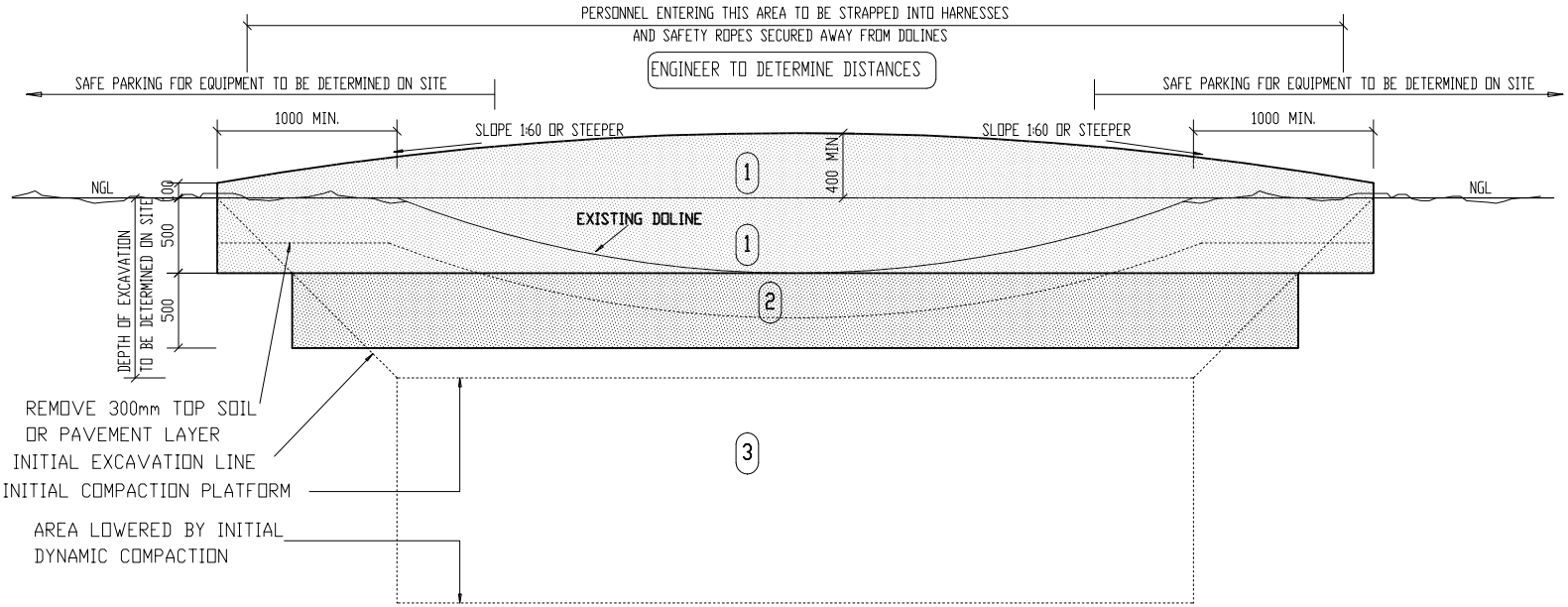

SECTION:
DOLINE REHABILITATION
DYNAMIC COMPACTION

1. TOP SELECTED FILLING:
   - 150mm LAYERS COMPACTED TO 95% OF MOD AASHTO MAXIMUM DRY DENSITY AT OPTIMUM MOISTURE CONTENT.
   - SILTY SAND OR CLAY (PARTICLE SIZE 1,55mm AND SMALLER)
2. DYNAMIC COMPACTION FINISHING PLATFORM:
   - LAST 0,5m FILLED IN UNCOMPACTED LAYER COARSE MATERIAL, SIZE NOT TO EXCEED 63mm Ø.
   - DYNAMIC COMPACTION, CONSISTING OF PRIMARY, SECONDARY AND FINISHING COMPACTION.
3. DYNAMIC COMPACTION BULK FILLING:
   - FILL IN 3m UNCOMPACTED LAYERS OF TYPE G8 MATERIAL WITH MAXIMUM SIZE OF COARSE MATERIAL NOT EXCEEDING 125mm IN DIAMETER.
   - DYNAMIC COMPACTION, CONSISTING OF PRIMARY AND SECONDARY COMPACTION.

NOTE:
IF PAVING IS TO BE RECONSTRUCTED OVER AREA, TOP LAYER SHALL BE OF SELECTED PAVING LAYERS.

NOTE:
PC. AND PA. REFER TO PARTICULAR SPECIFICATION.

DT 04/SH

DEPARTMENT OF PUBLIC WORKS
Private Bag X65
Pretoria
0001
Tel (012) 337 2000

departmental
DIAGRAMMATIC CIVIL ENGINEERING DETAILS FOR DOLOMITIC SOILS

title
DOLINE REHABILITATION DYNAMIC COMPACTION (DIAGRAMMATIC)

scale
1 : 50

date
2017/09/30

drawing number / type number
TYPE NO DT 04/SH

1. TOP SELECTED FILLING:
   -150mm LAYERS COMPACTED TO 95% MOD AASHTO MAXIMUM DRY DENSITY AT OPTIMAL MOISTURE CONTENT
   -SILTY SAND OR CLAY (PARTICLE SIZE 1,55mm AND SMALLER)

2. LOWER SELECTED FILLING:
   -150mm LAYERS COMPACTED TO 95% MOD AASHTO MAXIMUM DRY DENSITY AT OPTIMAL MOISTURE CONTENT.
   -MAXIMUM COARSE MATERIAL SIZE NOT TO EXCEED 63mm IN DIAMETER.

3. BULK FILLING:
   -200mm LAYERS COMPACTED TO 93% MOD AASHTO MAXIMUM DRY DENSITY AT OPTIMAL MOISTURE CONTENT OR A DENSITY LESS PREMEABLE THAN THE SURROUNDING SOIL WHICHEVER IS HIGHER.
   -MATERIAL TO BE TYPE G8 WITH MAXIMUM SIZE NOT EXCEEDING 125mm IN DIAMETER.

NOTE:
IF PAVING IS TO BE RECONSTRUCTED OVER AREA, TOP LAYERS 1 SHALL BE OF SELECTED PAVING LAYERS.

NOTE:
PC. AND PA. REFER TO PARTICULAR SPECIFICATION.

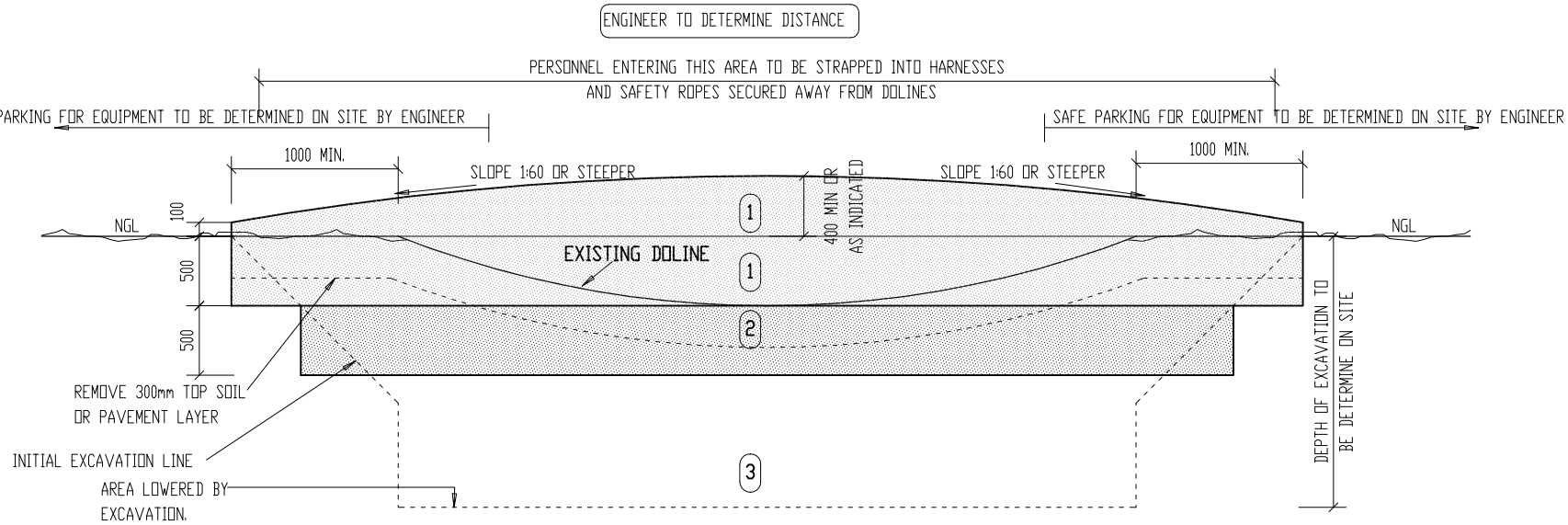

SECTION: DOLINE REHABILITATION
CONVENTIONAL COMPACTION

DT 05/SH

DEPARTMENT OF PUBLIC WORKS
Private Bag X65
Pretoria
0001
Tel (012) 337 2000

departmental
DIAGRAMMATIC CIVIL ENGINEERING DETAILS FOR DOLOMITIC SOILS

title
DOLINE REHABILITATION CONVENTIONAL COMPACTION (DIAGRAMMATIC)

scale
1 : 50

date
2017/09/30

drawing number / type number
TYPE NO DT 05/SH

1. -150mm LAYERS COMPACTED TO 93% MOD AASHTO MAXIMUM DRY DENSITY AT OPTIMAL MOISTURE CONTENT OR TO A DENSITY LESS PREMEABLE THAN THE SURROUNDING AREA WHICHEVER IS THE HIGHER.

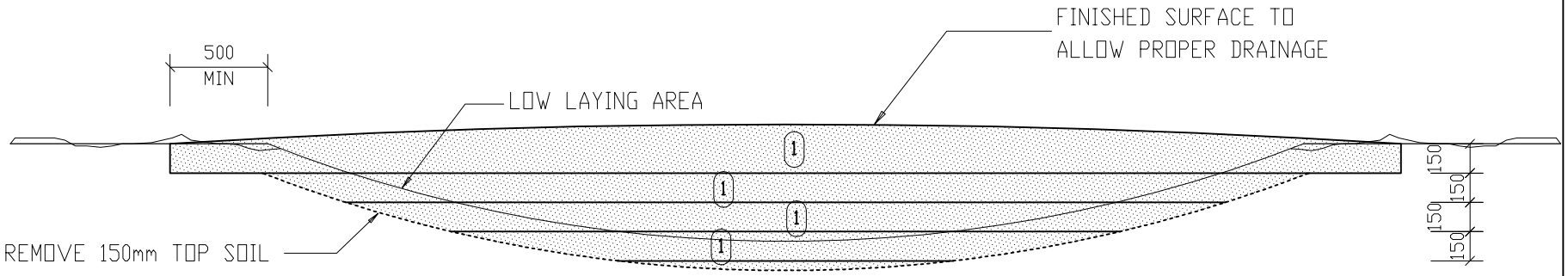

SECTION:
FILLING OF LOW LAYING AREAS
(OPEN AREAS)

DT 06/SH

DEPARTMENT OF
PUBLIC WORKS
Private Bag X65
Pretoria
0001
Tel (012) 337 2000

departmental
DIAGRAMMATIC CIVIL
ENGINEERING DETAILS
FOR DOLOMITIC SOILS

title
FILLING OF LOW LAYING
AREAS (OPEN AREAS)
(DIAGRAMMATIC)

scale
1 : 30

date
2017/09/30

drawing number / type number
TYPE NO DT 06/SH

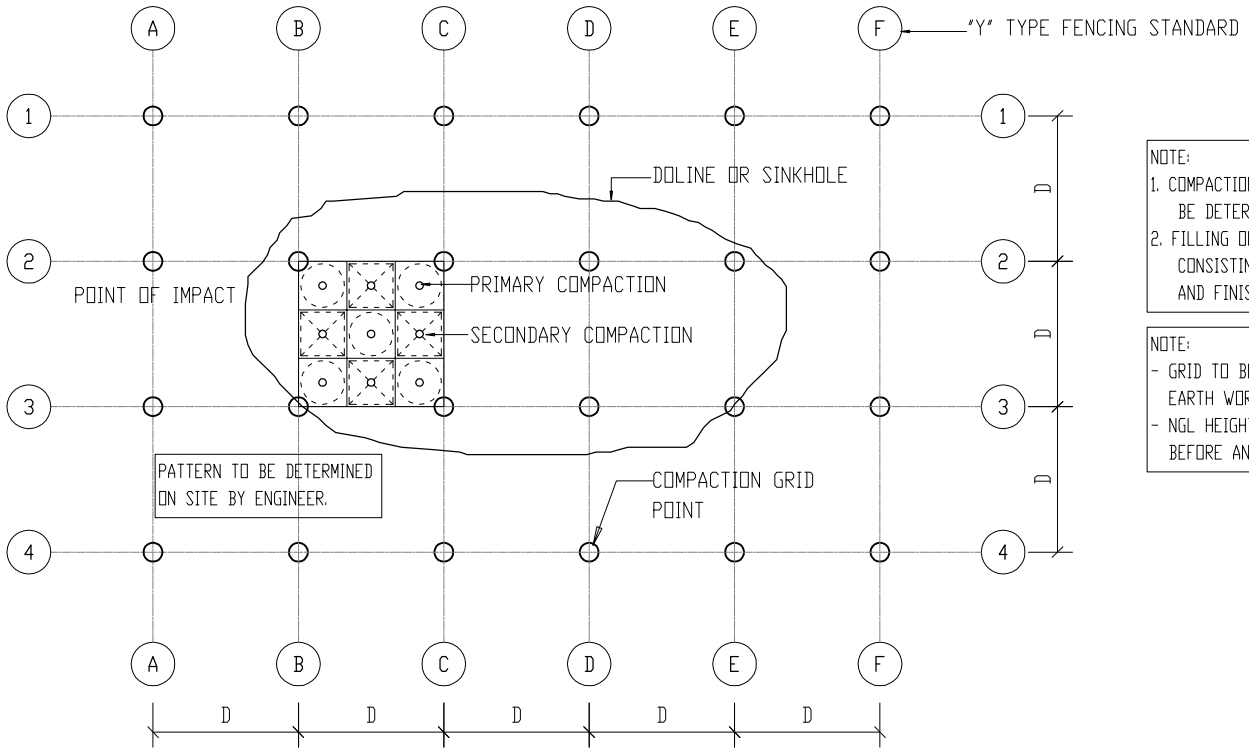

NOTE:
1. COMPACTION FOOTPRINT SPACING (D) TO BE DETERMINED BY ENGINEER ON SITE.
2. FILLING OF COMPACTION DEPRESSIONS CONSISTING OF PRIMARY, SECONDARY AND FINISHING COMPACTION.

NOTE:
- GRID TO BE SET OUT BEFORE ANY EARTH WORKS COMMENCE.
- NGL HEIGHTS TO BE RECORDED BEFORE AND AFTER COMPACTION.

SETTING OUT GRID FOR DYNAMIC COMPACTION (PLAN)

EXAMPLE ONLY

FIELD REPORT FOR EACH BLOCK

GRID BLOCK REFERENCE NUMBER	PRIMARY COMPACTION		SECONDARY COMPACTION		FINISHING COMPACTION
	NO. OF BLOWS	AVERAGE DEPTH	NO. OF BLOWS	AVERAGE DEPTH	NO. OF BLOWS
2/3-B/C	18		8		26
DROP HEIGHT	18m	1,6m	18m	1,5m	
2/3-B/C	14		8		22
DROP HEIGHT	18m	1,4m	18m	1.0m	
2/3-B/C	12		8		20
DROP HEIGHT	18m	1,2m	18m	1,0m	

EXAMPLE ONLY

PPV	
AVERAGE	MAXIMUM

AVERAGE DEPTH = AVERAGE DEPTH OF MATERIAL OF ALL POINTS FROM NATURAL GROUND LEVEL OF IMPACT AFTER COMPLETION OF COMPACTION PHASE.

DT 07/SH

DEPARTMENT OF PUBLIC WORKS
Private Bag X65
Pretoria
0001
Tel (012) 337 2000

departmental
DIAGRAMMATIC CIVIL ENGINEERING DETAILS FOR DOLOMITIC SOILS

title
SETTING OUT GRID FOR DYNAMIC COMPACTION (PLAN) (DIAGRAMMATIC)

scale
1 : 260

drawing number / type number
TYPE NO DT 07/SH

date
2017/09/30

NOTE 1:
DUST CONTROL.
ALL DISTURBED MATERIAL OR SURFACES TO BE KEPT SUFFICIENTLY MOIST TO PREVENT DUST POLLUTION.

1. GRASS SEEDING AS PER SPECIFICATION OR REPLANT REMOVED GRASS.
2. ALTERNATIVE 1:
   REMOVE TOPSOIL AND STOCKPILE. REPLACE TOPSOIL, LEVEL AND COMPACT TO 95% MOD AASHTO MAXIMUM DRY DENSITY AT OPTIMAL MOISTURE CONTENT IN ONE 150mm THICK LAYER.

   ALTERNATIVE 2:
   WINDROW 150mm TOPSOIL TO ONE SIDE, MAINTAIN, REDRESS, LEVEL AND COMPACT AS ABOVE.
3. RIP, SCARRIFY, GRADE TO EVEN SLOPE AND RECOMPACT 150mm INSITU MATERIAL TO 95% MOD AASHTO MAXIMUM DRY DENSITY AT OPTIMAL MOISTURE CONTENT.
4. IMPORTED FILL COMPACTED TO 95% MOD AASHTO MAXIMUM DRY DENSITY AT OPTIMAL MOISTURE CONTENT (MATERIAL TYPE PI > 14)
5. IMPORTED FILL COMPACTED TO 95% MOD AASHTO MAXIMUM DRY DENSITY AT OPTIMAL MOISTURE CONTENT (MATERIAL TYPE G7 IN TERMS TRH 14)

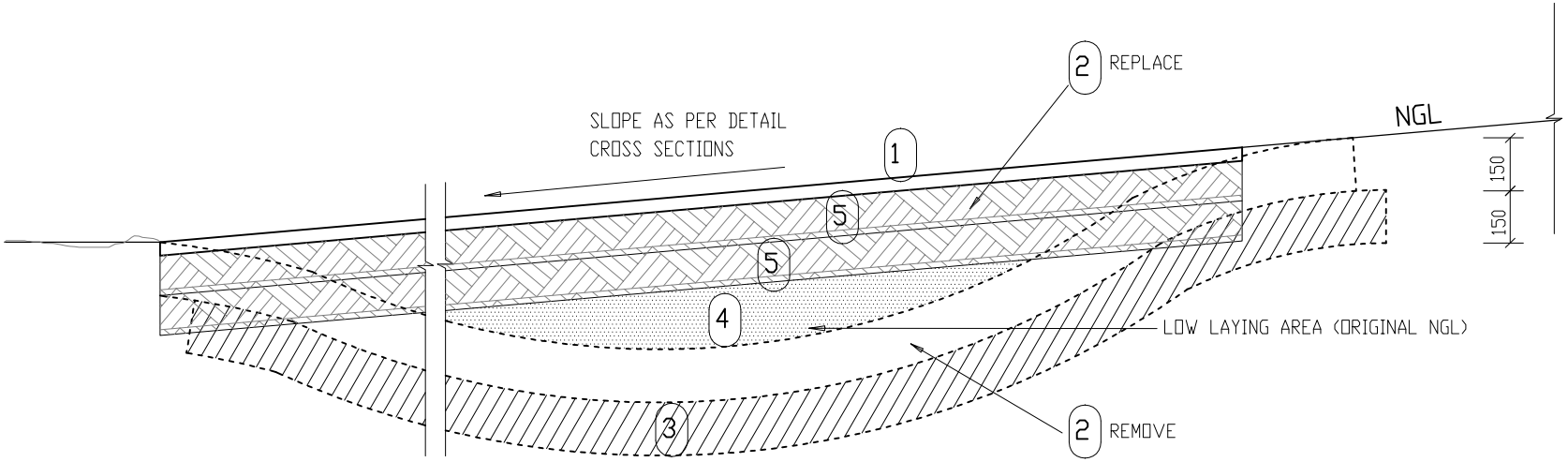

EARTHWORKS TO IMPROVE STORMWATER DRAINAGE IN TRAFFICKED AREAS.

DT 08/SH

DEPARTMENT OF PUBLIC WORKS
Private Bag X65
Pretoria
0001
Tel (012) 337 2000

departmental
DIAGRAMMATIC CIVIL ENGINEERING DETAILS FOR DOLOMITIC SOILS

title
EARTHWORKS TO IMPROVE STORM WATER DRAINAGE IN TRAFFICKED AREAS (DIAGRAMMATIC)

scale
1 : 20

date
2017/09/30

drawing number / type number
TYPE NO DT 08/SH