SEWER DRAINAGE DETAILS.

DT 01/D	SEWER TRENCHING, BEDDING AND BACKFILLING DETAILS.
DT 02/D	SOILCRETE / CONCRETE PIPE PROTECTION
DT 03/D	HDPE JUNCTION CHAMBER TYPICAL CONNECTION TO ALL BUILDINGS.
DT 04/D	SECTION OF 900-1200mmØ MANHOLE ON MAIN SEWER LINE.
DT 05/D	SECTION OF HDPE JUNCTION CHAMBER IN OPEN AREAS
DT 06/D	CASTING OF CONCRETE SLABS OVER FLEXIBLE PIPES.
DT 07/D	PLAN AND ELEVATION FOR SURFACE MOUNTING OF SEWER PIPES TO EXISTING BUILDINGS.
DT 08/D	STANDARD HEAVY DUTY PRECAST CONCRETE ROOFMSLAB AND LID FOR HDPE MANHOLE.
DT 08-1/D	SEWER DRAINAGE : GENERAL DETAILS
DT 08-2/D	SEWER DRAINAGE : GENERAL DETAILS
DT 09/D	SEWER DRAINAGE : SHOWER PAN TO LEAK DETECTION MANHOLE.
DT 09-1/D	TYPICAL DETAILS OF SHOWER PAN AND LEAK DETECTION MANHOLE
DT 10/D	TYPICAL WELDING DETAILS FOR HDPE SEWER MANHOLE: SECTION A
DT 11/D	TYPICAL WELDING DETAILS FOR HDPE SEWER MANHOLE: SECTION B
DT 12/D	TYPICAL WELDING DETAILS FOR HDPE SEWER MANHOLE: SECTION C
DT 13/D	TYPICAL WELDING DETAILS FOR HDPE SEWER MANHOLE: SECTION C
DT 14/D	TRENCHING, BEDDING AND BACKFILLING DETAILS OVER EXISTING PIPES

DEPARTMENT OF PUBLIC WORKS
Private Bag X65
Pretoria
0001
Tel (012) 337 2000

departmental	title	scale	date
DIAGRAMMATIC CIVIL ENGINEERING DETAILS FOR DOLOMITIC SOILS	SEWER DRAINAGE: DRAWING LIST.	N.A.	30-09-2017

drawing number / type number

TYPE NO DT 00/D

UNSURFACED AND UNTRAFFICKED AREAS

COMPACTED SELECTED BACKFILL:
COMPACT TO 93% OF MOD AASHTO MAXIMUM DRY DENSITY AT OPTIMUM MOISTURE CONTENT.
MATERIAL TO SANS 1200 DB 3.5 (MAXIMUM AGGREGATE SIZE TO BE 63mm)

COMPACTED SELECTED FILL BLANKET:
COMPACT TO 93% OF MOD AASHTO MAXIMUM DRY DENSITY AT OPTIMUM MOISTURE CONTENT.
MATERIAL TO SANS 1200 LB 3.2 (MAXIMUM AGGREGATE SIZE TO BE 10mm)

COMPACTED SELECTED BEDDING:
COMPACT TO 93% OF MOD AASHTO MAXIMUM DRY DENSITY AT OPTIMUM MOISTURE CONTENT.
MATERIAL TO SANS 1200 LB 3.3 (MAXIMUM AGGREGATE SIZE TO BE 6mm)

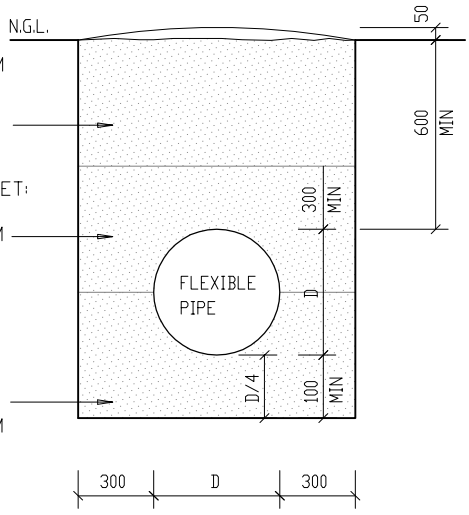

PAVING AND WALKWAYS

DRIVEWAYS

COMPACT TO 95% OF MOD AASHTO MAXIMUM DRY DENSITY AT OPTIMUM MOISTURE CONTENT. (LAST 150mm)

COMPACTED SELECTED BACKFILL:
COMPACT TO 93% OF MOD AASHTO MAXIMUM DRY DENSITY AT OPTIMUM MOISTURE CONTENT.
MATERIAL TO SANS 1200 DB 3.5 (MAXIMUM AGGREGATE SIZE TO BE 63mm)

COMPACTED SELECTED FILL BLANKET:
COMPACT TO 93% OF MOD AASHTO MAXIMUM DRY DENSITY AT OPTIMUM MOISTURE CONTENT.
MATERIAL TO SANS 1200 LB 3.2 (MAXIMUM AGGREGATE SIZE TO BE 10mm)

COMPACTED SELECTED BEDDING:
COMPACT TO 93% OF MOD AASHTO MAXIMUM DRY DENSITY AT OPTIMUM MOISTURE CONTENT.
MATERIAL TO SANS 1200 LB 3.3 (MAXIMUM AGGREGATE SIZE TO BE 6mm)

COMPACT TO 95% OF MOD AASHTO MAXIMUM DRY DENSITY AT OPTIMUM MOISTURE CONTENT AND/OR SOILCRETE (1:8 MIX) MAX. FOR TOP 800mm IF SO REQUIRED, BY ENGINEER AND APPROVED BY DRMU MANAGER.

1:8 SOILCRETE IF SO REQUIRED AND APPROVED BY DRMU MANAGER.
SEE DT 02/D

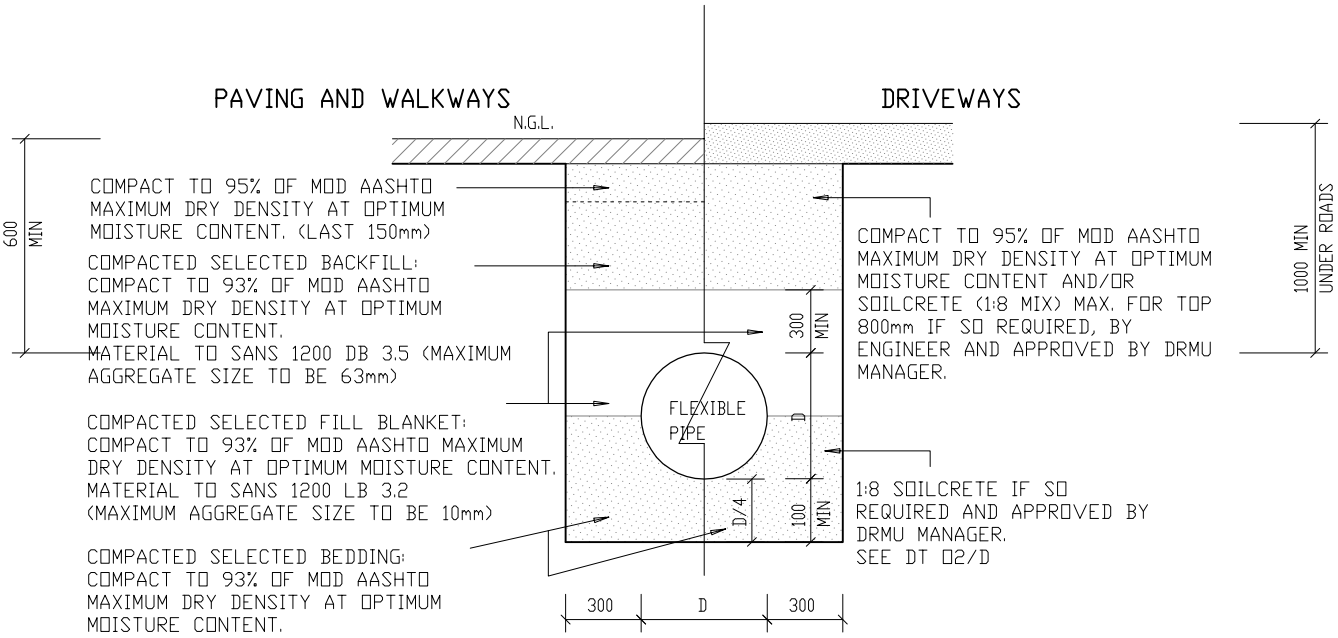

SEWER
TRENCHING, BEDDING AND BACKFILLING DETAILS
SCALE 1:30

NOTE:
ALL BEDDING SURROUND AND BACKFILL MATERIALS SHALL AFTER COMPACTION BE LESS PREMEABLE THAN THE IN-SITU SURROUNDING SOIL

DT 01/D

DEPARTMENT OF PUBLIC WORKS Private Bag X65 Pretoria 0001 Tel (012) 337 2000	departmental DIAGRAMMATIC CIVIL ENGINEERING DETAILS FOR DOLOMITIC SOILS	title SEWER DRAINAGE: SEWER TRENCHING, BEDDING AND BACKFILLING DETAILS (DIAGRAMMATIC)	scale 1 : 30	date 30-09-2017
			drawing number / type number TYPE NO DT 01/D	

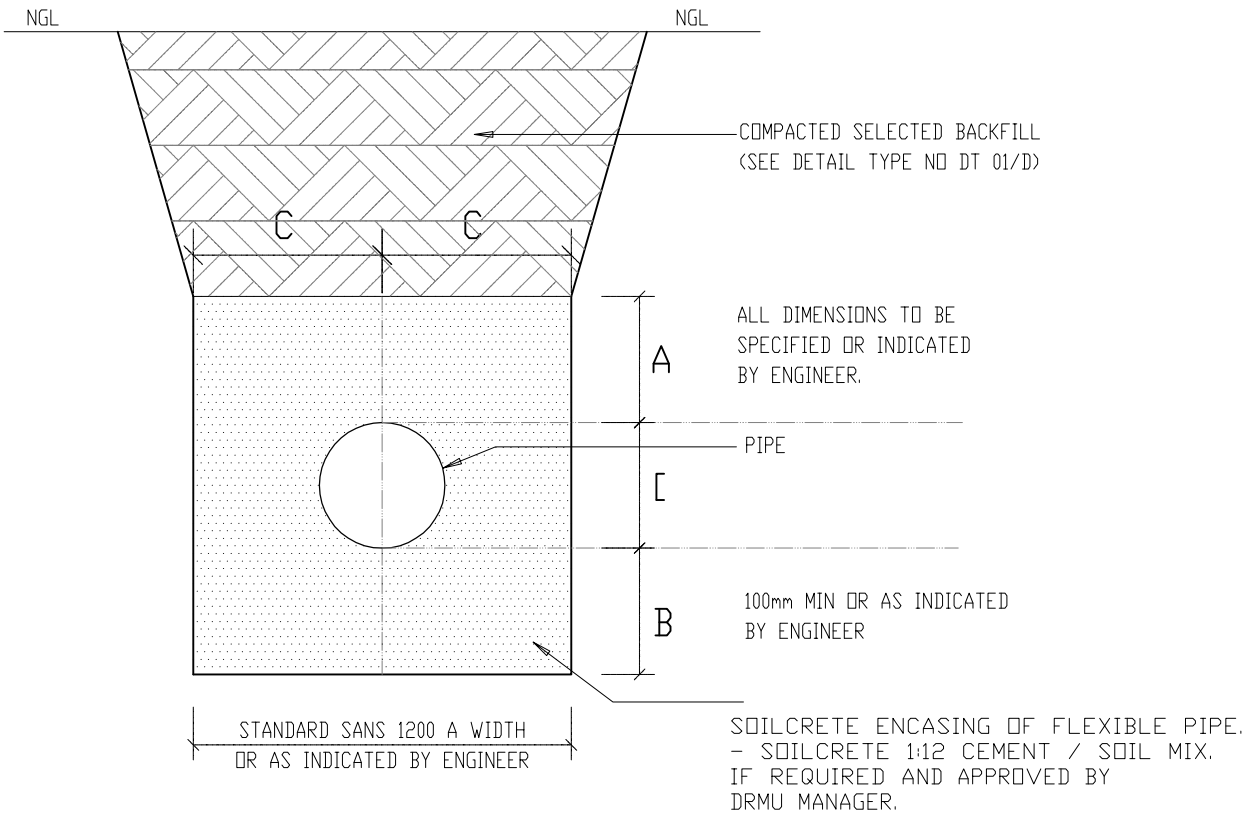

SOILCRETE PIPE PROTECTION
(SHALL ONLY BE USED IF REQUIRED AND APPROVED BY DRMU MANAGER).

NOTE:
ALL BACKFILL MATERIALS SHALL AFTER COMPACTION BE LESS PERMEABLE THAN THE IN-SITU SURROUNDING SOIL.

DT 02/D

DEPARTMENT OF
PUBLIC WORKS
Private Bag X65
Pretoria
0001
Tel (012) 337 2000

departmental	title	scale	date
DIAGRAMMATIC CIVIL ENGINEERING DETAILS FOR DOLOMITIC SOILS	SEWER DRAINAGE: SOILCRETE / CONCRETE PIPE PROTECTION (DIAGRAMMATIC)	1 : 10	30-09-2017

drawing number / type number
TYPE NO DT 02/D

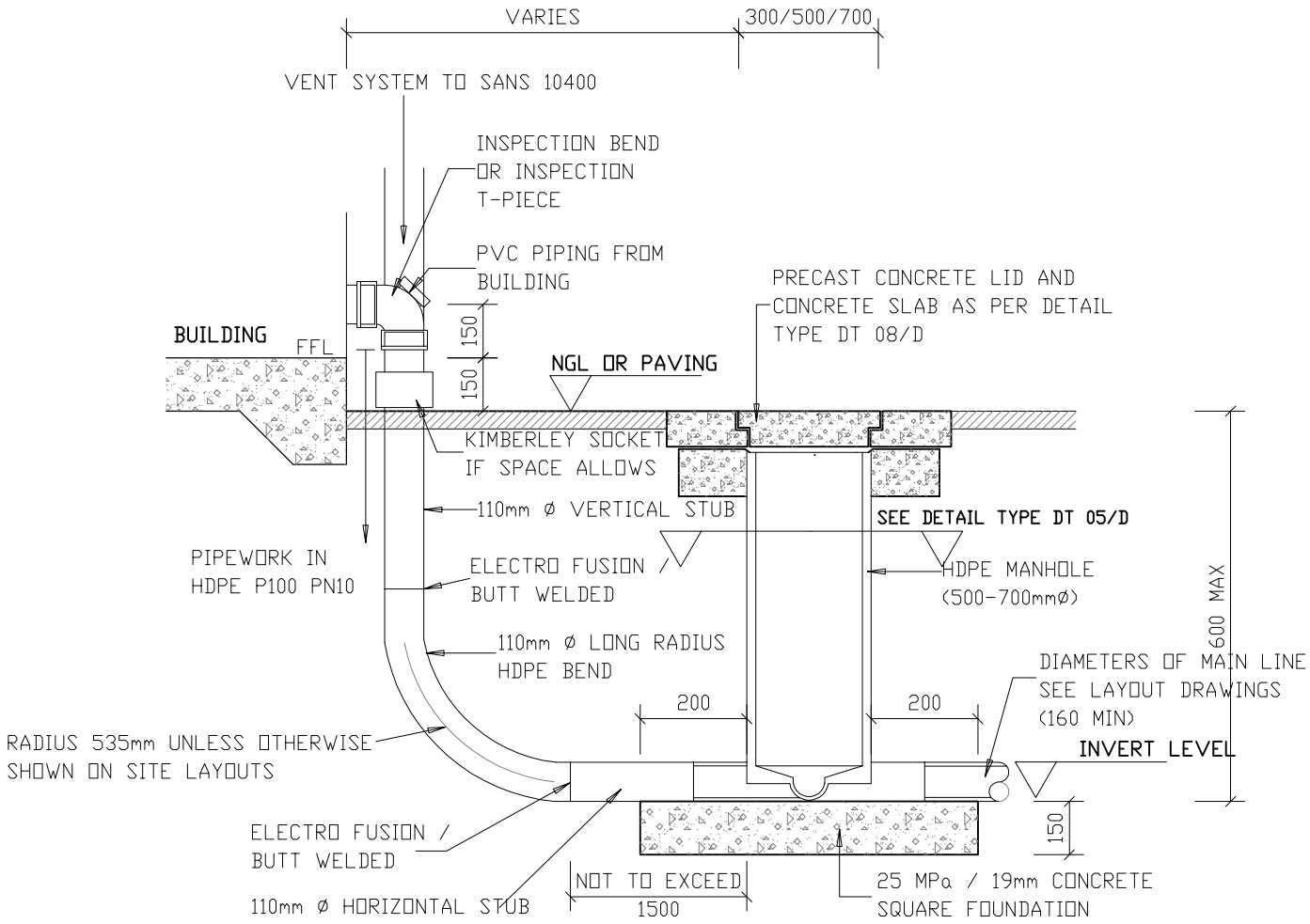

HDPE JUNCTION CHAMBER
TYPICAL CONNECTION TO ALL BUILDINGS.

SEE TYPE DT 05/D FOR
BENCHING DETAILS

DT 03/D

DEPARTMENT OF
PUBLIC WORKS
Private Bag X65
Pretoria
0001
Tel (012) 337 2000

departmental
DIAGRAMMATIC CIVIL
ENGINEERING DETAILS
FOR DOLOMITIC SOILS

title
SEWER DRAINAGE:
HDPE JUNCTION CHAMBER
TYPICAL CONNECTION TO
ALL BUILDINGS.
(DIAGRAMMATIC)

scale
1 : 20

date
30-09-2017

drawing number / type number
TYPE NO DT 03/D

DEPARTMENT OF PUBLIC WORKS
Private Bag X65
Pretoria
0001
Tel (012) 337 2000

departmental
DIAGRAMMATIC CIVIL ENGINEERING DETAILS FOR DOLOMITIC SOILS

title
SEWER DRAINAGE:
SECTION OF 900-1200mm MANHOLE ON MAIN SEWER LINE
(DIAGRAMMATIC)

scale
1 : 20

date
30-09-2017

drawing number / type number
TYPE NO DT 04/D

1200mm Ø PRECAST CONCRETE ROOF SLAB (HEAVY DUTY) WITH:
1. TYPE 1A (SANS 558) COVER AND FRAME FOR ROADS OR/
2. HEAVY DUTY COMPOSITE (NON-FERROUS) SANS 51024) MANHOLE COVER AND FRAME WITH ONE ADAPTOR SLAB FOR PAVED OR OPEN AREAS.

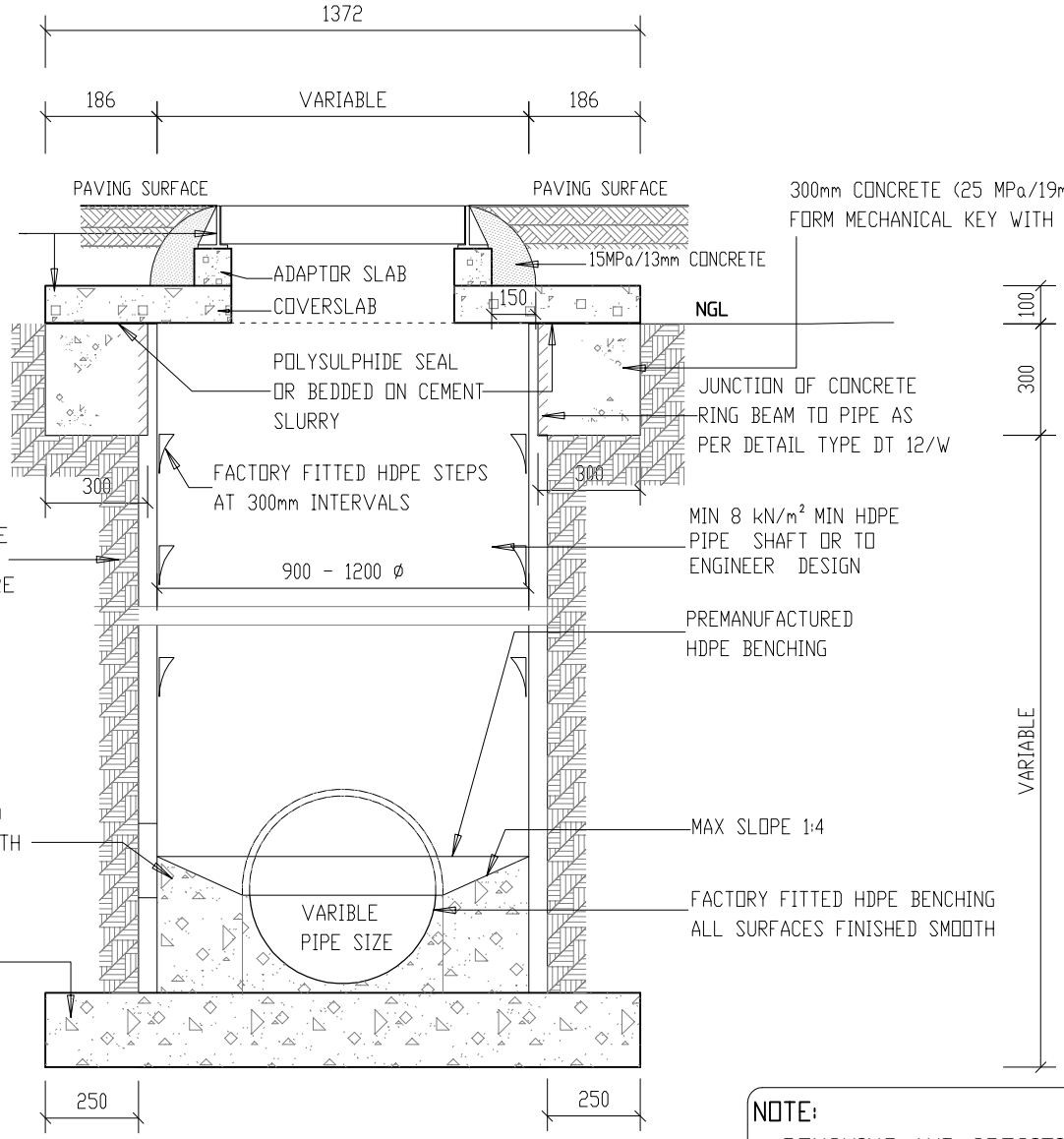

SECTION OF 900 - 1200mm Ø
MANHOLE ON MAIN SEWER LINE

NOTE:
- BENCHING AND SPECIFICATION THEREOF SIMILAR AS PER DETAILS TYPE NO DT 05/D.
- MANUFACTURING DETAILS AS PER TYPE NO DT 09/D.

DT 04/D

NOTE:

- ENGINEER TO SPECIFY MANHOLE SHAFT (MIN 8KN) AND ALL IN AND OUTLET SIZES AS WELL AS ANGLES.
- MANUFACTURING DETAILS AS PER TYPE NO DT 09/D.

PRECAST LID AND COVER AS PER DETAIL TYPE DT 08/D

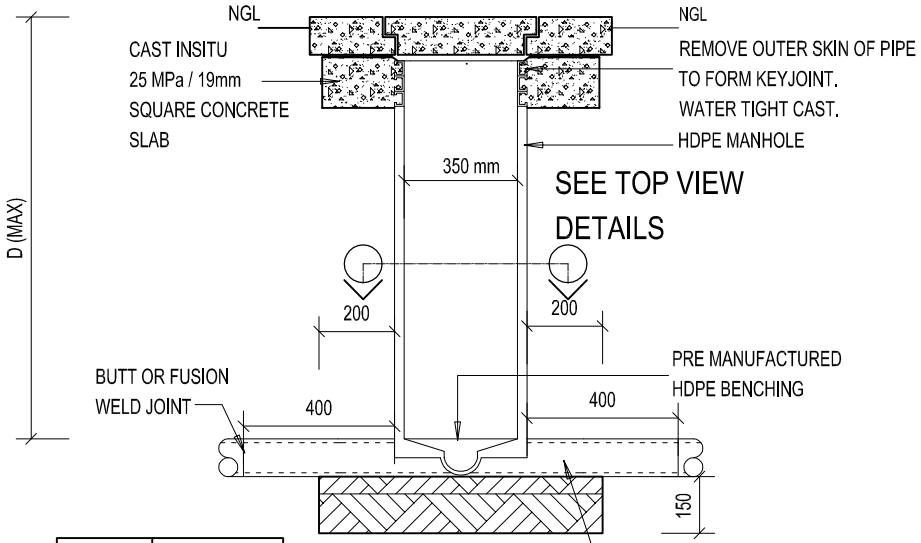

Ø mm	Dmm(MAX)
350	350
500	450
700	750

SECTION OF
HDPE JUNCTION
CHAMBER IN OPEN AREAS

TOP VIEW

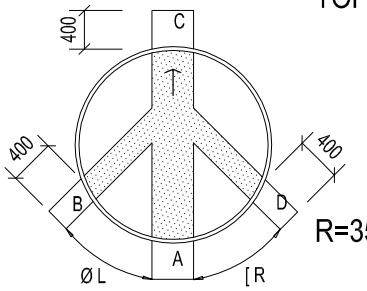

STANDARD
BENCHING LAYOUT

R=350/500/700

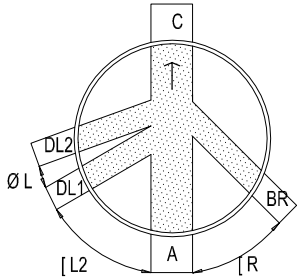

PURPOSE MADE
BENCHING FOR DOUBLE
LEFT JUNCTION MANHOLE

R=350/500/700

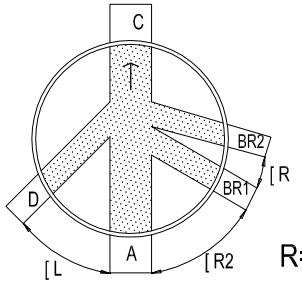

PURPOSE MADE
BENCHING FOR DOUBLE
RIGHT JUNCTION MANHOLE

R=350/500/700

DT 05/D

DEPARTMENT OF
PUBLIC WORKS
Private Bag X65
Pretoria
0001
Tel (012) 337 2000

departmental
DIAGRAMMATIC CIVIL
ENGINEERING DETAILS
FOR DOLOMITIC SOILS

title
SECTION OF
HDPE JUNCTION
CHAMBER IN OPEN
AREAS
(DIAGRAMMATIC)

scale
1 : 20

date
30-09-2017

drawing number / type number
TYPE NO DT 05/D

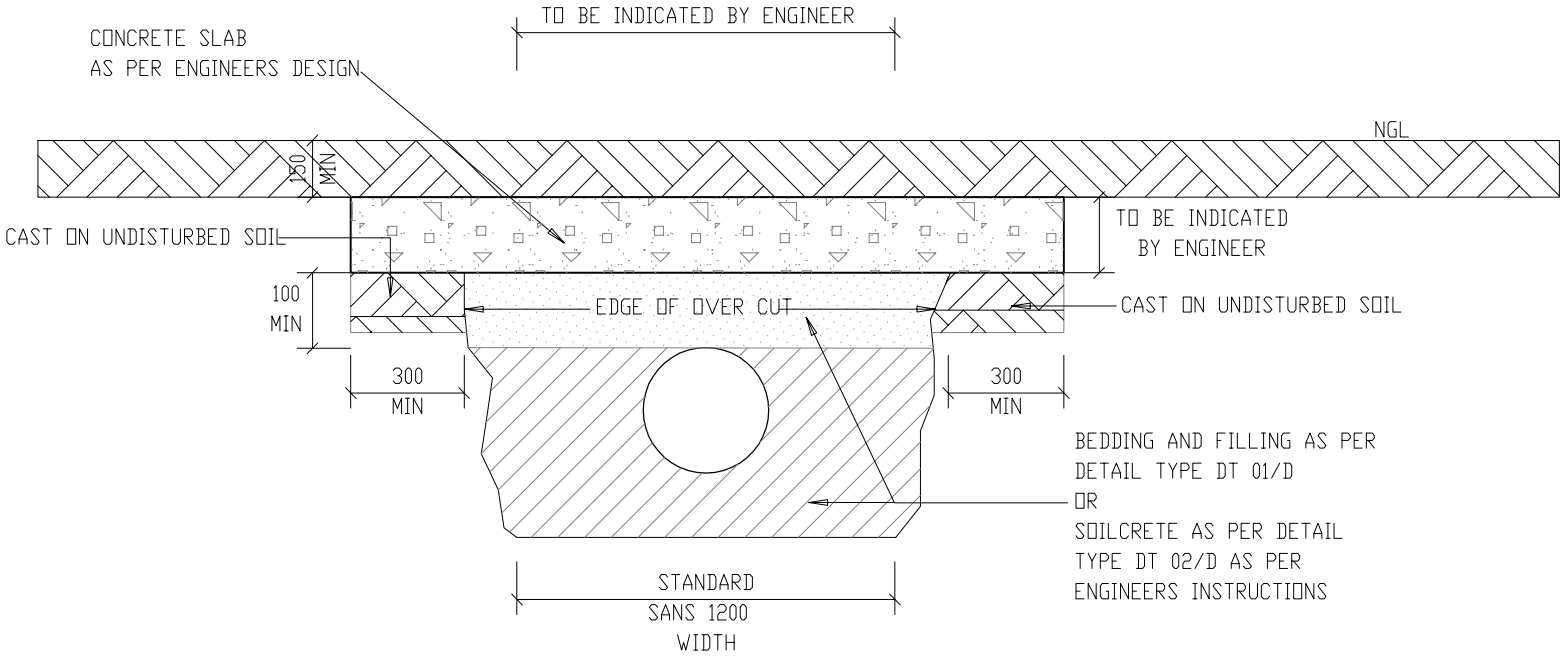

CASTING OF CONCRETE SLABS OVER FLEXIBLE PIPES

DT 06/D

DEPARTMENT OF PUBLIC WORKS
Private Bag X65
Pretoria
0001
Tel (012) 337 2000

departmental
DIAGRAMMATIC CIVIL ENGINEERING DETAILS FOR DOLOMITIC SOILS

title
DRAINAGE:
CASTING OF CONCRETE SLABS OVER FLEXIBLE PIPES
(DIAGRAMMATIC)

scale
1 : 20

date
30-09-2017

drawing number / type number
TYPE NO DT 06/D

NOTE:
DRAWING SHOWS TYPICAL UPGRADING FROM SUBSURFACE TO ABOVE GROUND LEVEL INSTALLATION

PIPE TYPE
-ABOVE NGL:
ALL PIPING IS uPVC WITH SPIGOT AND SOCKET JOINTS AS PER SANS 967
FIX TO WALL WITH STANDARD ALUMINIUM HOLDER BATS (2 PER FITTING).

-BELOW NGL:
ALL PIPING IN HDPE CLASS 6 AS PER SANS 533-4427
PART II TYPE 4 WITH BUTT OR FUSION WELDED JOINTS.

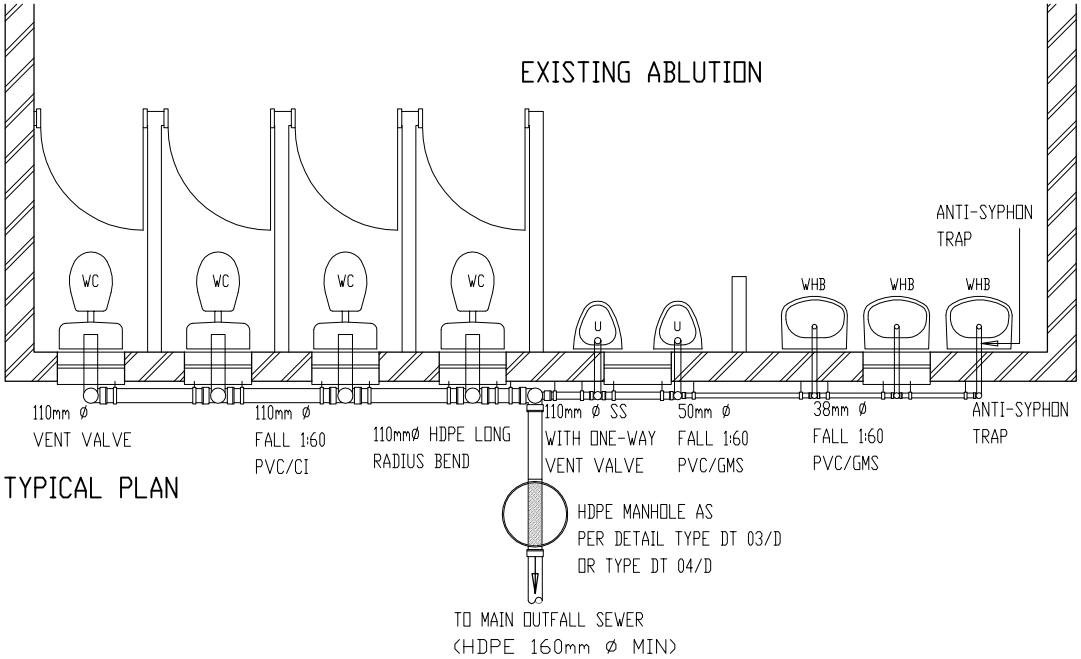

TYPICAL PLAN

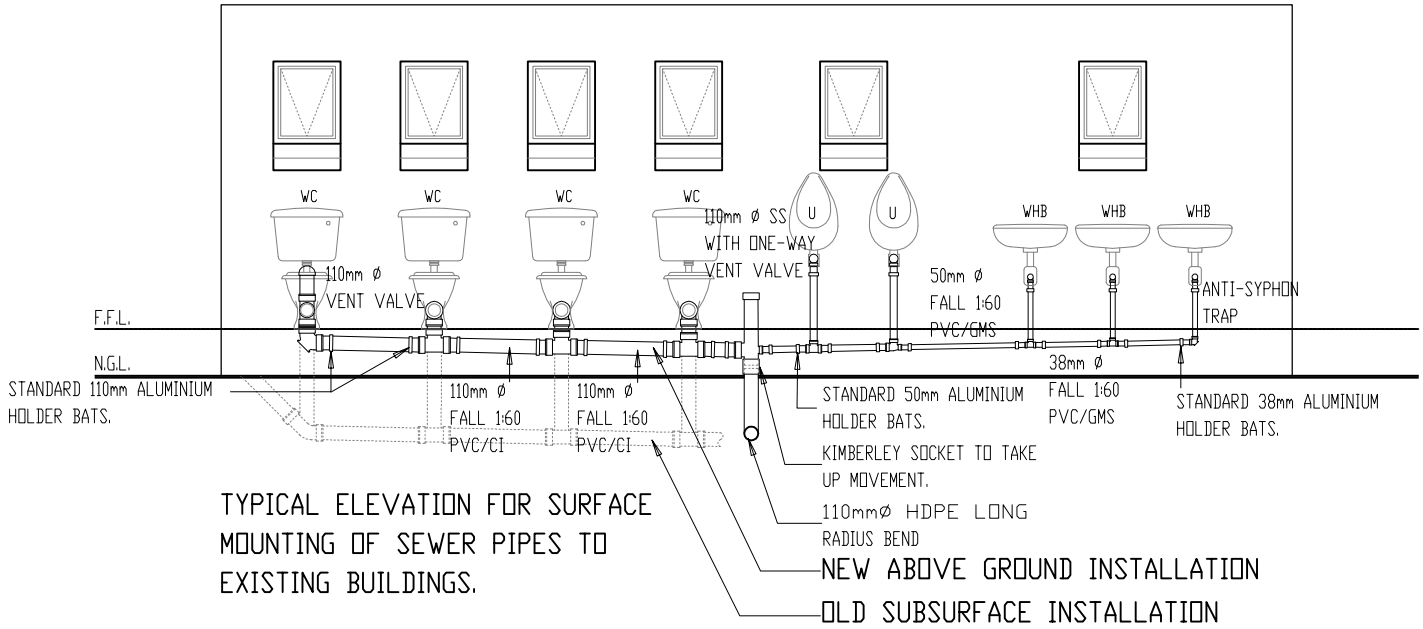

TYPICAL ELEVATION FOR SURFACE MOUNTING OF SEWER PIPES TO EXISTING BUILDINGS.

DT 07/D

DEPARTMENT OF PUBLIC WORKS
Private Bag X65
Pretoria
0001
Tel (012) 337 2000

departmental
DIAGRAMMATIC CIVIL ENGINEERING DETAILS FOR DOLOMITIC SOILS

title
SEWER DRAINAGE:
PLAN AND ELEVATION FOR SURFACE MOUNTING OF SEWER PIPES TO EXISTING BUILINGS.
(DIAGRAMMATIC)

scale
1 : 60

date
30-09-2017

drawing number / type number
TYPE NO DT 07/D

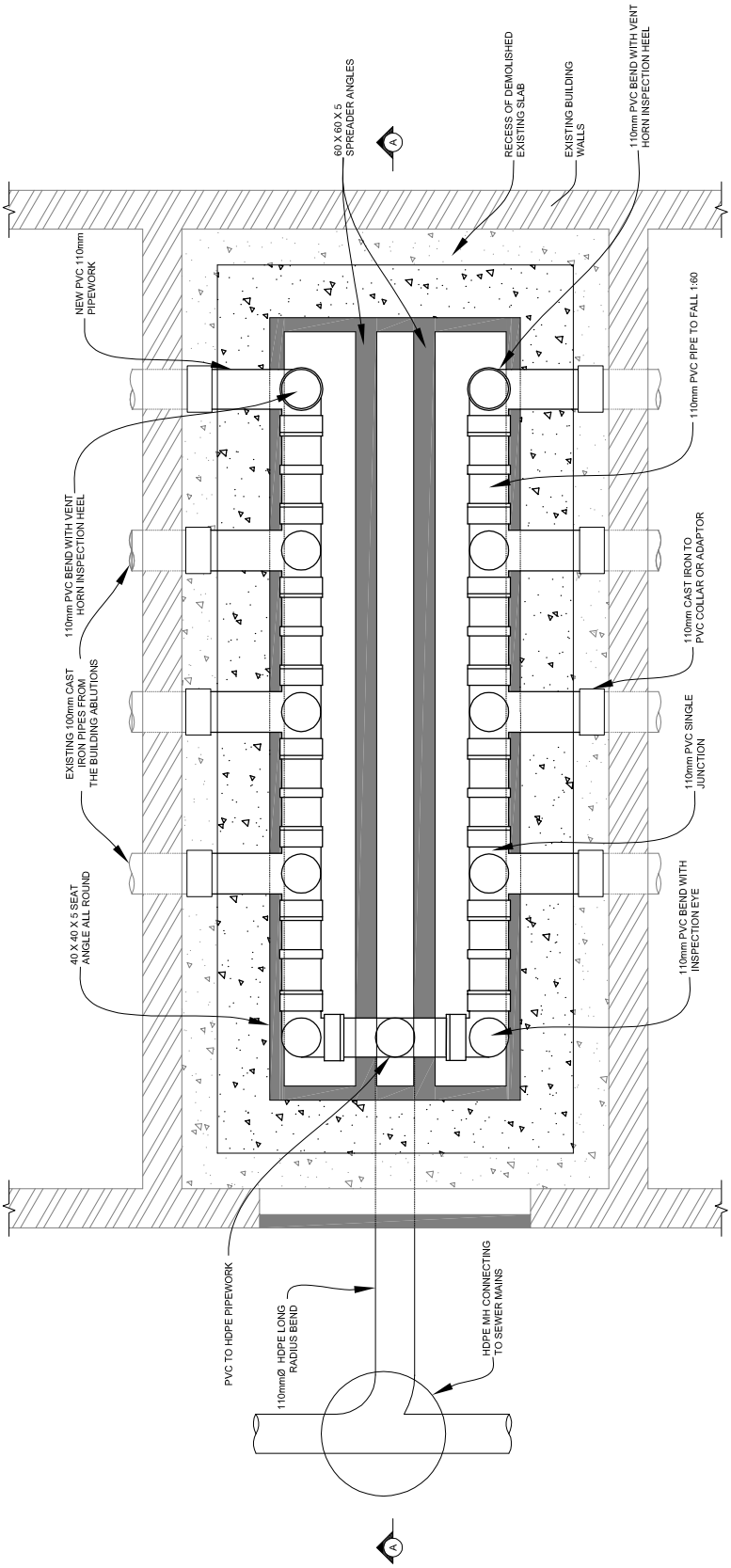

PLAN:INTERNAL SERVICES DUCT SHOWING TYPICAL CONNECTION DETAIL TO BUILDINGS

SCALE: 1:20

DEPARTMENT OF
PUBLIC WORKS
Private Bag X65
Pretoria
0001
Tel (012) 337 2000

departmental	title	scale	date
DIAGRAMMATIC CIVIL ENGINEERING DETAILS FOR DOLOMITIC SOILS	SEWER DRAINAGE: GENERAL DETAILS	AS SHOWN	30-09-2017

drawing number / type number

TYPE NO DT 08-1/D

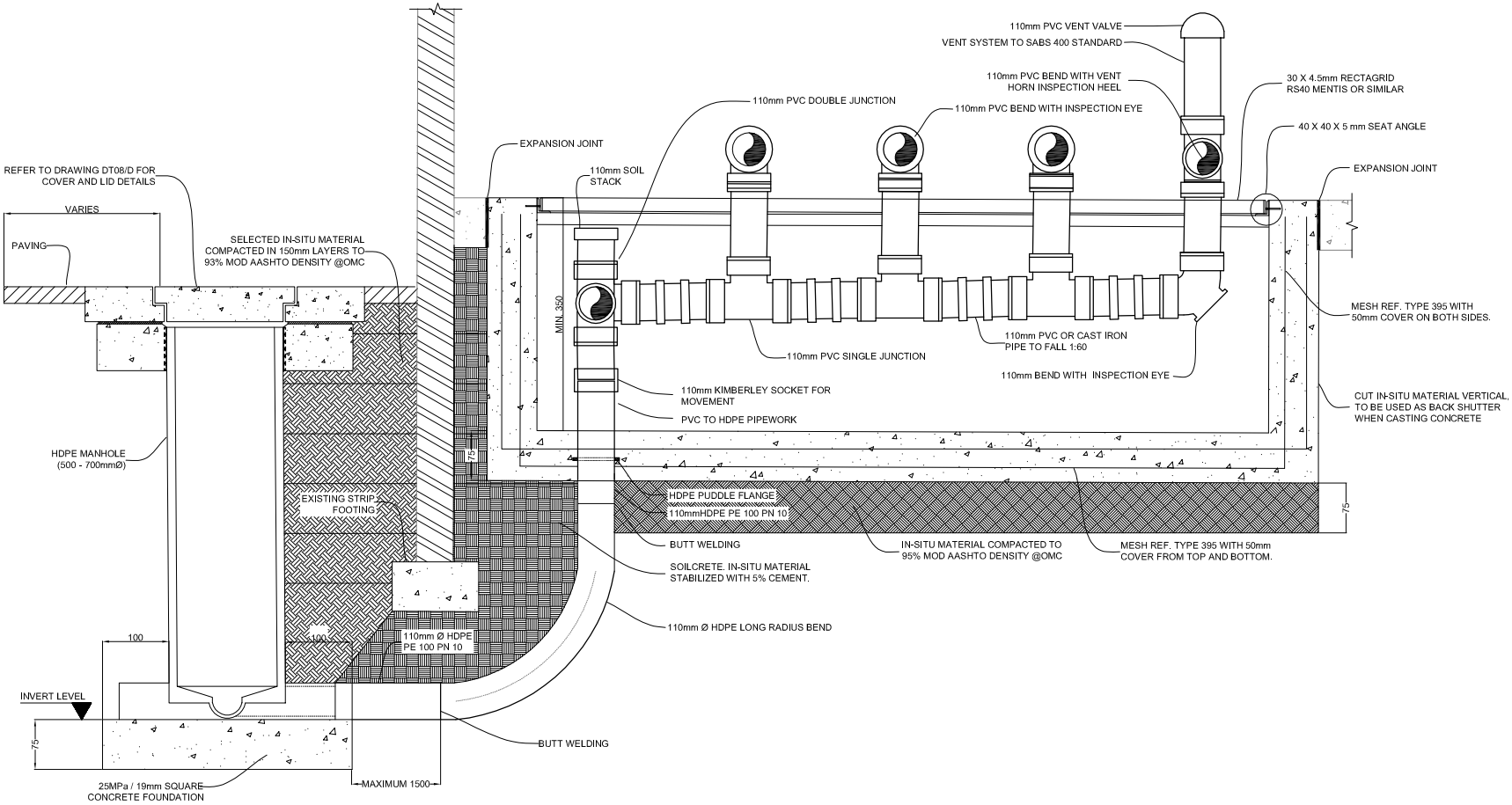

SECTION A-A: JUNCTION CHAMBER UNDERNEATH PAVED AREAS AND TYPICAL CONNECTION DETAIL TO BUILDINGS

SCALE: 1:20

DEPARTMENT OF PUBLIC WORKS
Private Bag X65
Pretoria
0001
Tel (012) 337 2000

departmental
DIAGRAMMATIC CIVIL ENGINEERING DETAILS FOR DOLOMITIC SOILS

title
SEWER DRAINAGE: GENERAL DETAILS

scale
AS SHOWN

date
30-09-2017

drawing number / type number
TYPE NO DT 08-2/D

ø MH	ø CS
500mm	900mm
700mm	1050mm
900-1000mm	1200mm

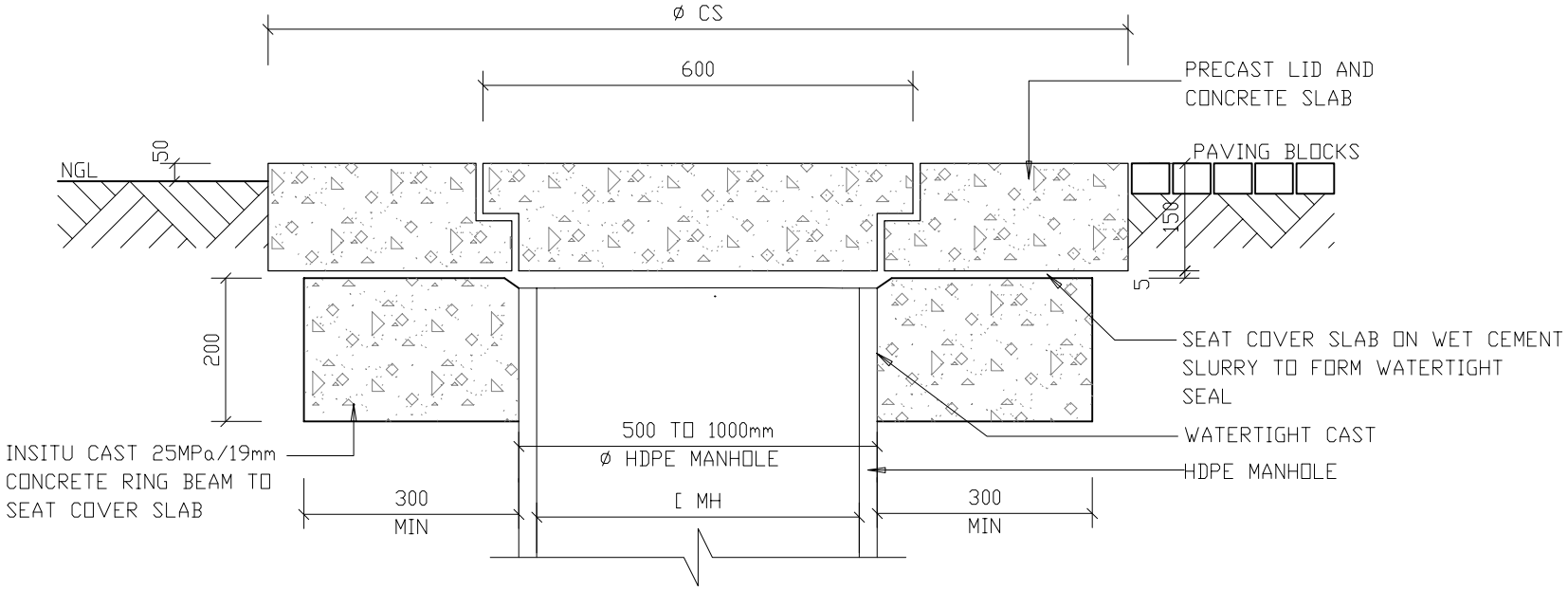

STANDARD HEAVY DUTY PRECAST CONCRETE LID AND COVER SLAB FOR HDPE MANHOLES (1200mm OD)

DT 08/D

DEPARTMENT OF
PUBLIC WORKS
Private Bag X65
Pretoria
0001
Tel (012) 337 2000

departmental
DIAGRAMMATIC CIVIL
ENGINEERING DETAILS
FOR DOLOMITIC SOILS

title
SEWER DRAINAGE:
STANDARD HEAVY DUTY
PRECAST CONCRETE
ROOFSLAB AND LID FOR
HDPE MANHOLE
(DIAGRAMMATIC)

scale
1 : 10

date
30-09-2017

drawing number / type number
TYPE NO DT 08/D

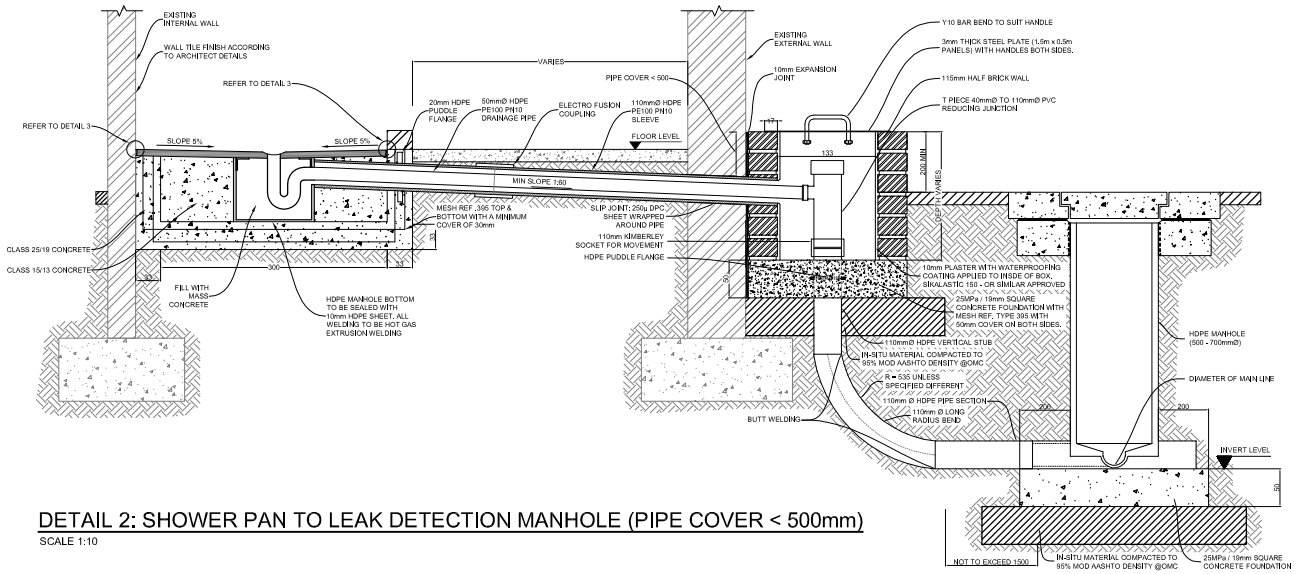

DETAIL 2: SHOWER PAN TO LEAK DETECTION MANHOLE (PIPE COVER < 500mm)

SCALE 1:10

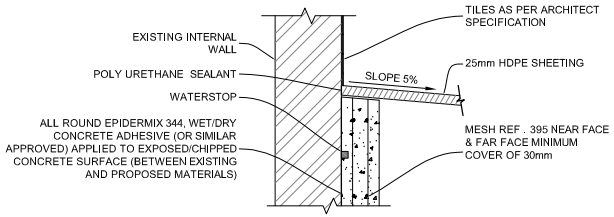

DETAIL 3: SHOWER PAN SEAL DETAIL

SCALE 1:10

DEPARTMENT OF PUBLIC WORKS
Private Bag X65
Pretoria
0001
Tel (012) 337 2000

departmental
DIAGRAMMATIC CIVIL ENGINEERING DETAILS FOR DOLOMITIC SOILS

title
TYPICAL DETAILS OF SHOWER PAN AND LEAK DETECTION MANHOLE

scale
1 : 10

date
30-09-2017

drawing number / type number
TYPE NO DT 09-1/D

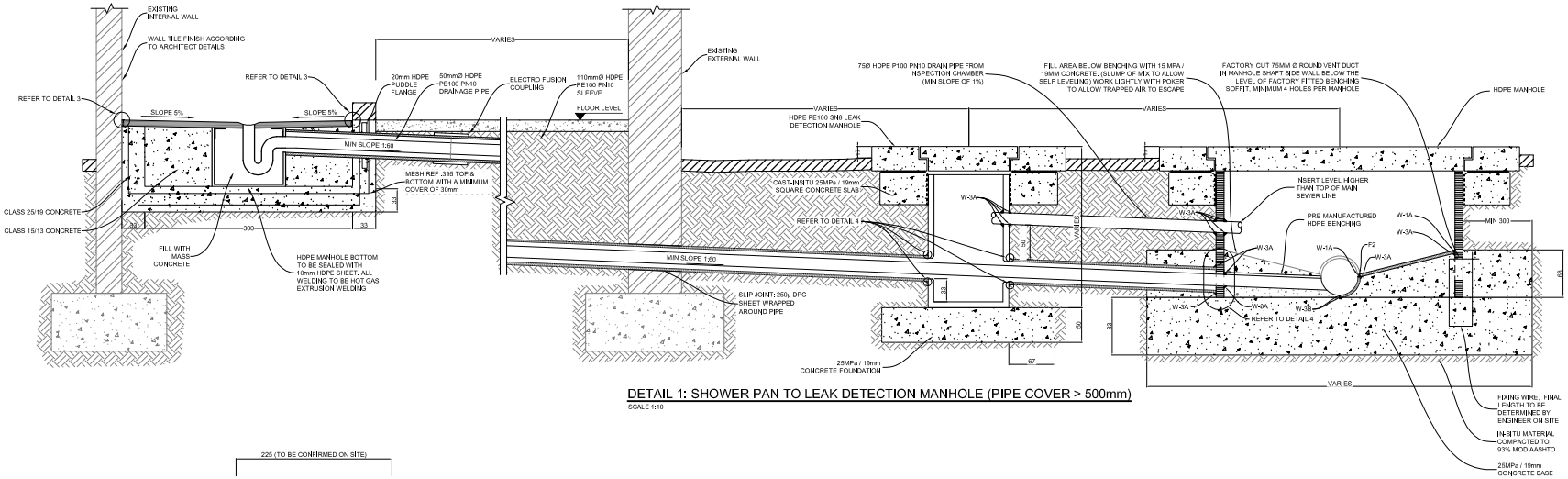

DETAIL 1: SHOWER PAN TO LEAK DETECTION MANHOLE (PIPE COVER > 500mm)

SCALE 1:10

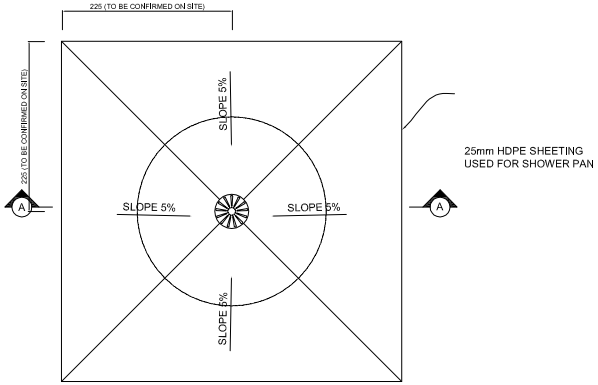

PLAN: SHOWER PAN

SCALE 1:10

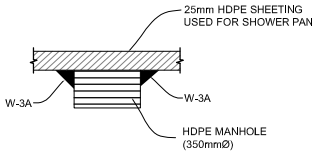

DETAIL 4: WELDING DETAIL

SCALE 1:10

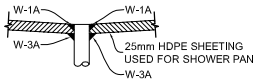

DETAIL 5: WELDING DETAIL

SCALE 1:10

GENERAL FINISHING NOTE:

F1- REMOVE FILLER EXPULSION AND FINISH WELD SMOOTH WITH PIPE SURFACE.

F2- REMOVE FILLER EXPULSION AND FINISH WELD WITH SMOOTH ROUNDED EDGE.

F3- FINISH PIPE WITH SMOOTH ROUNDED EDGE.

F4- REMOVE INTERNAL WELDING BEAD.

OTHER RELEVANT MANUFACTURING STANDARDS:

SANS 10268-10
SANS 10269
SANS 10270
SANS 1655
SANS 1671-1

GENERAL WELDING SPECIFICATION:

BUTT WELDING OF PIPES TO COMPLY TO SANS 10268-1

HOT GAS WELDING TO COMPLY TO SANS 10268-3

HOT GAS EXTRUSION WELDING TO COMPLY TO SANS 10268-4

WELDING NOTATION FOR JOINTS SEE SABS 0270 / SANS 10270 PAR 5 AS WELL AS ANNEX A.

W-1A = REF TABLE A.1 FILLET GROUP A FIG 1A.

W-2A = REF TABLE A.1 FILLET GROUP A FIG 2A.

W-3A = REF TABLE A.1 FILLET GROUP A FIG 3A.

W-3B = REF TABLE A.1 BUTT GROUP B FIG 3B.

W-BUTT = REF TABLE A.2 BUTT GROUP B.

TYPICAL WELDING DETAILS

SCALE: 1:10

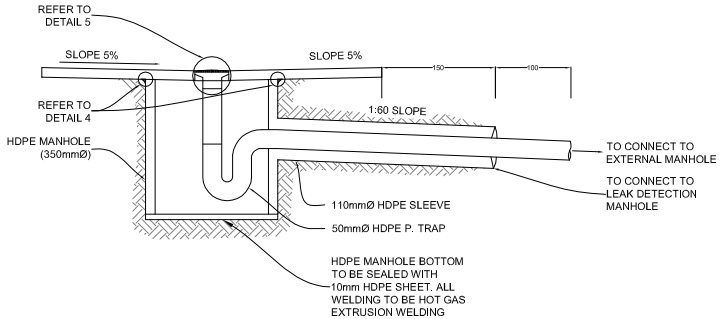

SECTION A-A: SHOWER PAN

SCALE 1:10

DEPARTMENT OF PUBLIC WORKS
Private Bag X65
Pretoria
0001
Tel (012) 337 2000

departmental
DIAGRAMMATIC CIVIL ENGINEERING DETAILS FOR DOLOMITIC SOILS

title
SEWER DRAINAGE: SHOWER PAN TO LEAK DETECTION MANHOLE (DIAGRAMMATIC)

scale
1 : 10

date
30-09-2017

drawing number / type number
TYPE NO DT 09/D

GENERAL NOTE:
- ALL MATERIALS TO BE HDPE PE-100 AS PER SANS 4427

HOOP STIFFNESS OF MANHOLE SHAFT TO BE 8kN/m²

OTHER RELEVANT MANUFACTURING STANDARDS:
SANS 10268-1
SANS 10269
SANS 10270
SANS 1655
SANS 1671-1

GENERAL WELDING SPECIFICATION:
- BUTT WELDING OF PIPES TO COMPLY SANS 10268-1
- HOT GAS WELDING TO COMPLY SANS 10268-3
- HOT GAS EXTRUSION WELDING TO COMPLY TO SANS 10268-4

GENERAL FINISHING NOTE:
F1- REMOVE FILLER EXPULSION AND FINISH WELD SMOOTH WITH PIPE SURFACE.
F2- REMOVE FILLER EXPULSION AND FINISH WELD WITH SMOOTH ROUNDED EDGE.
F3- FINISH PIPE WITH SMOOTH ROUNDED EDGE.
F4- REMOVE INTERNAL WELDING BEAD.

WELDING NOTATION FOR JOINTS
SEE SANS 10270
PAR 5 AS WELL AS ANNEX A.
W-1A = REF TABLE A.1 FILLET GROUP A FIG 1A.
W-2A = REF TABLE A.1 FILLET GROUP A FIG 2A.
W-3A = REF TABLE A.1 FILLET GROUP A FIG 3A.
W-3B = REF TABLE A.1 BUTT GROUP B FIG 3B.
W-BUTT = REF TABLE A.2 BUTT GROUP B

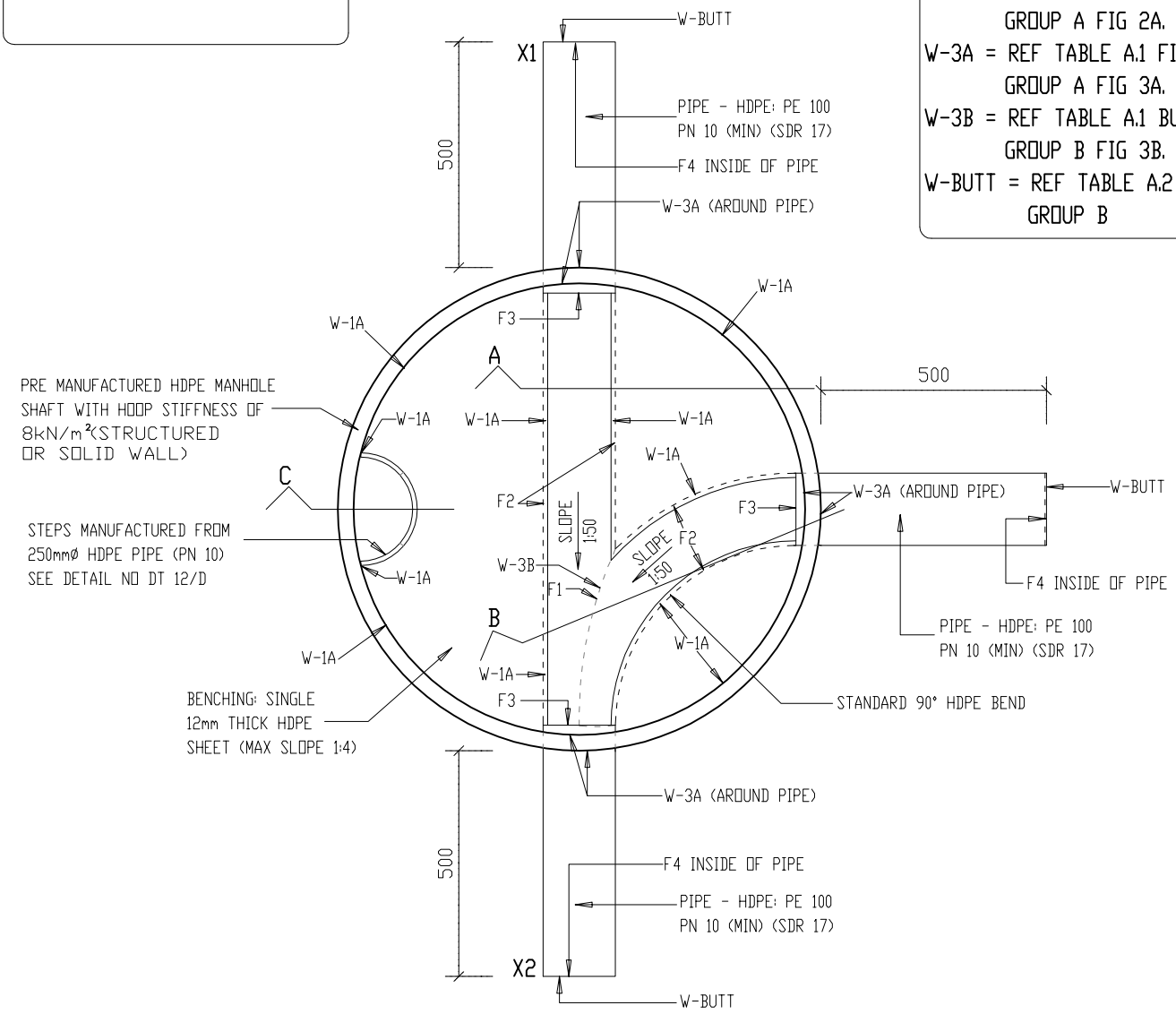

X1 TO X2 IS A SINGLE LENGTH PIPE WITH SECTION REMOVED TO FORM CHANNEL

HDPE MANHOLE
PLAN
SCALE 1:15

SECTION A: SEE DT 12/D
SECTION B: SEE DT 13/D
SECTION C: SEE DT 14/D

DEPARTMENT OF PUBLIC WORKS Private Bag X65 Pretoria 0001 Tel (012) 337 2000	departmental DIAGRAMMATIC CIVIL ENGINEERING DETAILS FOR DOLOMITIC SOILS	title TYPICAL WELDING DETAILS FOR HDPE SEWER MANHOLE: PLAN	scale 1 : 15	date 30-09-2017
			drawing number / type number TYPE NO DT 10/D	

GENERAL NOTE:
- ALL MATERIALS TO BE HDPE PE-100 AS PER SANS 4427 HOOP STIFFNESS OF MANHOLE SHAFT TO BE 8kN/m²

OTHER RELEVANT MANUFACTURING STANDARDS:
SANS 10268-1
SANS 10269
SANS 10270
SANS 1655
SANS 1671-1

GENERAL WELDING SPECIFICATION:
- BUTT WELDING OF PIPES TO COMPLY TO SANS 10268-1
- HOT GAS WELDING TO COMPLY TO SANS 10268-3
- HOT GAS EXTRUSION WELDING TO COMPLY TO SANS 10268-4

GENERAL FINISHING NOTE:
F1- REMOVE FILLER EXPULSION AND FINISH WELD SMOOTH WITH PIPE SURFACE.
F2- REMOVE FILLER EXPULSION AND FINISH WELD WITH SMOOTH ROUNDED EDGE.
F3- FINISH PIPE WITH SMOOTH ROUNDED EDGE.
F4- REMOVE INTERNAL WELDING BEAD.

WELDING NOTATION FOR JOINTS
SEE SANS 10270
PAR 5 AS WELL AS ANNEX A.
W-1A = REF TABLE A.1 FILLET GROUP A FIG 1A.
W-2A = REF TABLE A.1 FILLET GROUP A FIG 2A.
W-3A = REF TABLE A.1 FILLET GROUP A FIG 3A.
W-3B = REF TABLE A.1 BUTT GROUP B FIG 3B.
W-BUTT = REF TABLE A.2 BUTT GROUP B

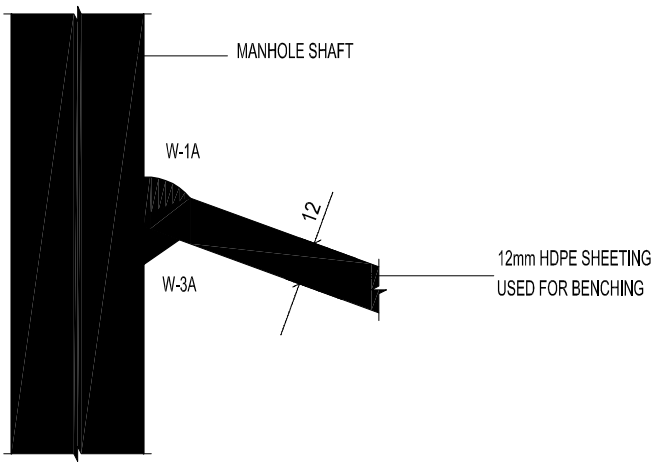

DETAIL 1
SCALE 1:2

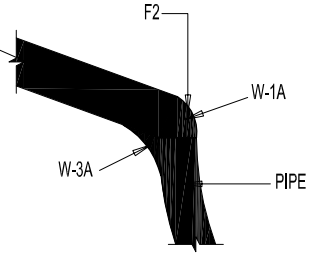

DETAIL 2
SCALE 1:2

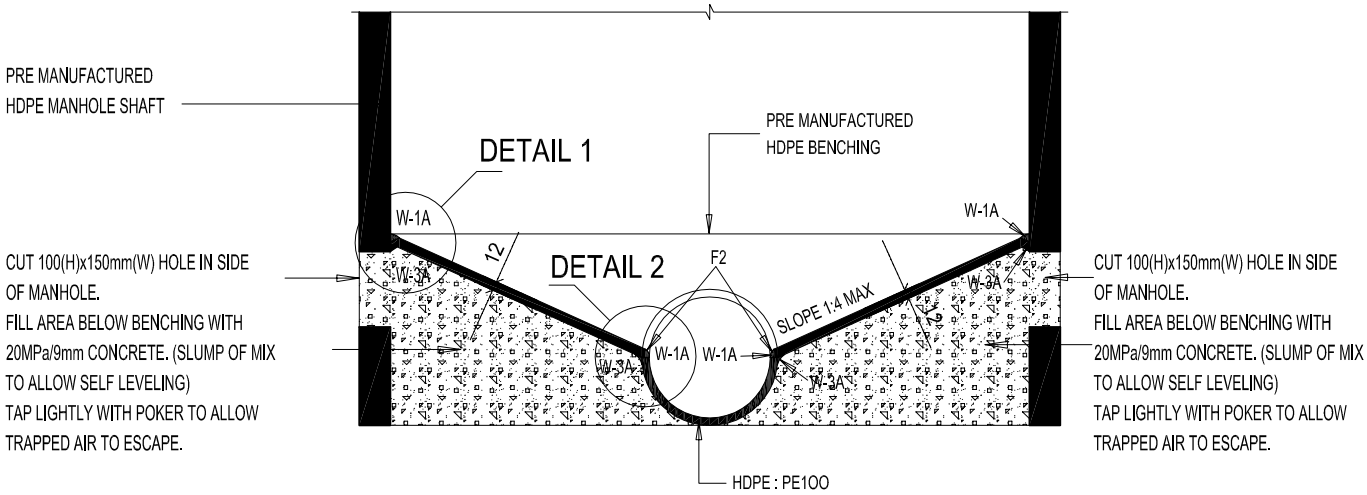

SECTION A
SCALE 1:10

DEPARTMENT OF PUBLIC WORKS Private Bag X65 Pretoria 0001 Tel (012) 337 2000	departmental DIAGRAMMATIC CIVIL ENGINEERING DETAILS FOR DOLOMITIC SOILS	title TYPICAL WELDING DETAILS FOR HDPE SEWER MANHOLE: SECTION A	scale AS SHOWN	date 30-09-2017
			drawing number / type number TYPE NO DT 11/D	

GENERAL NOTE:
- ALL MATERIALS TO BE HDPE PE-100 AS PER SANS 4427 HOOP STIFFNESS OF MANHOLE SHAFT TO BE 8kN/m²

GENERAL WELDING SPECIFICATION:
- BUTT WELDING OF PIPES TO COMPLY TO SANS 10268-1
- HOT GAS WELDING TO COMPLY TO SANS 10268-3
- HOT GAS EXTRUSION WELDING TO COMPLY TO SANS 10268-4

GENERAL FINISHING NOTE:
F1- REMOVE FILLER EXPULSION AND FINISH WELD SMOOTH WITH PIPE SURFACE.
F2- REMOVE FILLER EXPULSION AND FINISH WELD WITH SMOOTH ROUNDED EDGE.
F3- FINISH PIPE WITH SMOOTH ROUNDED EDGE.
F4- REMOVE INTERNAL WELDING BEAD.

OTHER RELEVANT MANUFACTURING STANDARDS:
SANS 10268-1
SANS 10269
SANS 10270
SANS 1655
SANS 1671-1

WELDING NOTATION FOR JOINTS
SEE SANS 10270
PAR 5 AS WELL AS ANNEX A.
W-1A = REF TABLE A.1 FILLET GROUP A FIG 1A.
W-2A = REF TABLE A.1 FILLET GROUP A FIG 2A.
W-3A = REF TABLE A.1 FILLET GROUP A FIG 3A.
W-3B = REF TABLE A.1 BUTT GROUP B FIG 3B.
W-BUTT = REF TABLE A.2 BUTT GROUP B

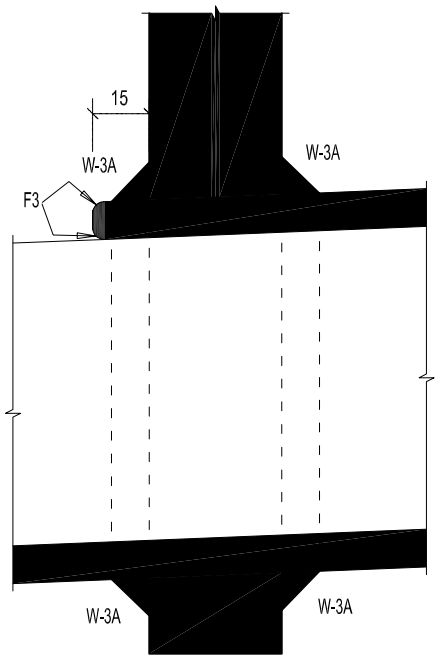

DETAIL 3
SCALE 1:2

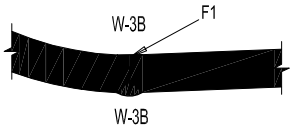

DETAIL 4
SCALE 1:2

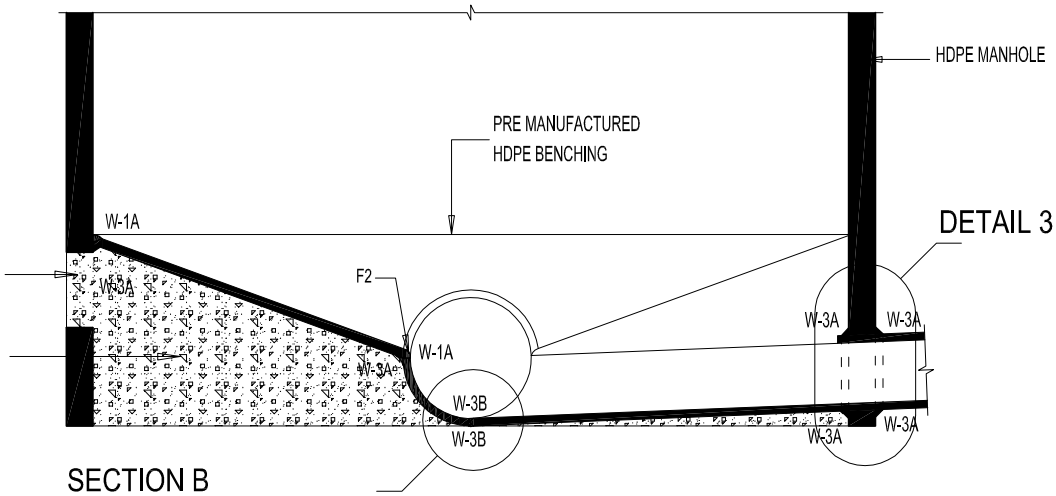

SECTION B
SCALE 1:10

DEPARTMENT OF PUBLIC WORKS Private Bag X65 Pretoria 0001 Tel (012) 337 2000	departmental DIAGRAMMATIC CIVIL ENGINEERING DETAILS FOR DOLOMITIC SOILS	title TYPICAL WELDING DETAILS FOR HDPE SEWER MANHOLE: SECTION B	scale AS SHOWN	date 30-09-2017
			drawing number / type number TYPE NO DT 12/D	

GENERAL NOTE:
- ALL MATERIALS TO BE HDPE PE-100 AS PER SANS 4427

  HOOP STIFFNESS OF MANHOLE SHAFT TO BE 8kN/m²

OTHER RELEVANT MANUFACTURING STANDARDS:
SANS 10268-1
SANS 10269
SANS 10270
SANS 1655
SANS 1671-1

GENERAL WELDING SPECIFICATION:
- BUTT WELDING OF PIPES TO COMPLY TO SANS 10268-1
- HOT GAS WELDING TO COMPLY TO SANS 10268-3
- HOT GAS EXTRUSION WELDING TO COMPLY TO SANS 10268-4

GENERAL FINISHING NOTE:
F1- REMOVE FILLER EXPULSION AND FINISH WELD SMOOTH WITH PIPE SURFACE.
F2- REMOVE FILLER EXPULSION AND FINISH WELD WITH SMOOTH ROUNDED EDGE.
F3- FINISH PIPE WITH SMOOTH ROUNDED EDGE.
F4- REMOVE INTERNAL WELDING BEAD.

WELDING NOTATION FOR JOINTS
SEE SANS 10270
PAR 5 AS WELL AS ANNEX A.
W-1A = REF TABLE A.1 FILLET GROUP A FIG 1A.
W-2A = REF TABLE A.1 FILLET GROUP A FIG 2A.
W-3A = REF TABLE A.1 FILLET GROUP A FIG 3A.
W-3B = REF TABLE A.1 BUTT GROUP B FIG 3B.
W-BUTT = REF TABLE A.2 BUTT GROUP B

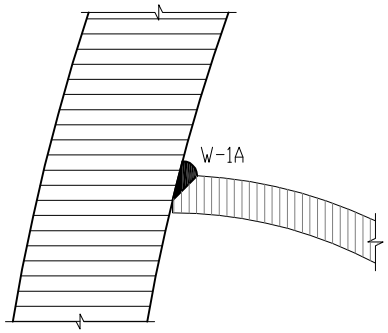

DETAIL 5
SCALE 1:2

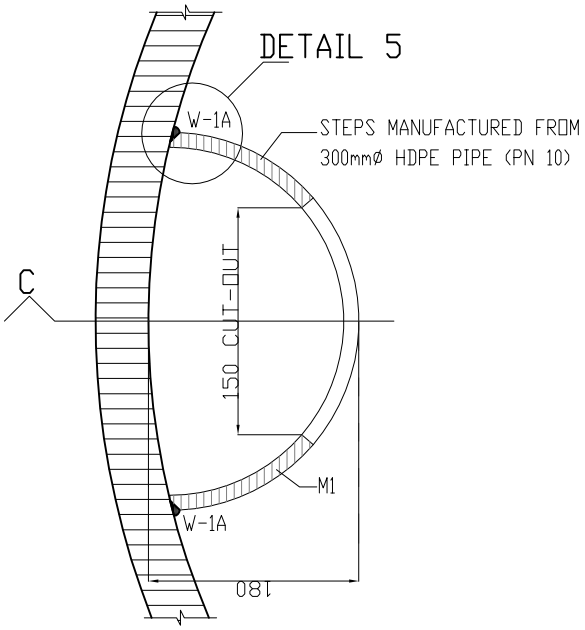

HDPE STEPS IN MANHOLE
PLAN
SCALE 1:5

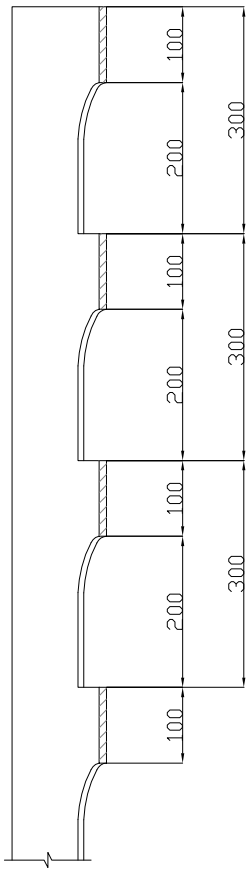

SECTION C
SCALE 1:10

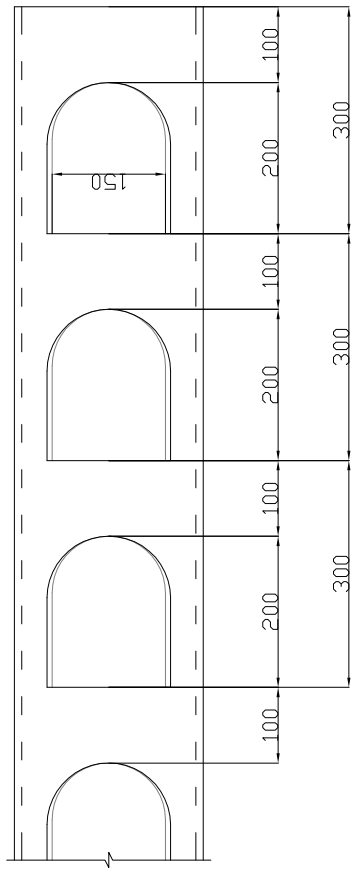

ELEVATION OF STEPS
SCALE 1:10

DEPARTMENT OF PUBLIC WORKS Private Bag X65 Pretoria 0001 Tel (012) 337 2000	departmental DIAGRAMMATIC CIVIL ENGINEERING DETAILS FOR DOLOMITIC SOILS	title TYPICAL WELDING DETAILS FOR HDPE SEWER MANHOLE: SECTION C	scale AS SHOWN	date 30-09-2017
			drawing number / type number TYPE NO DT 13/D	

DRIVEWAYS AND WALKWAYS

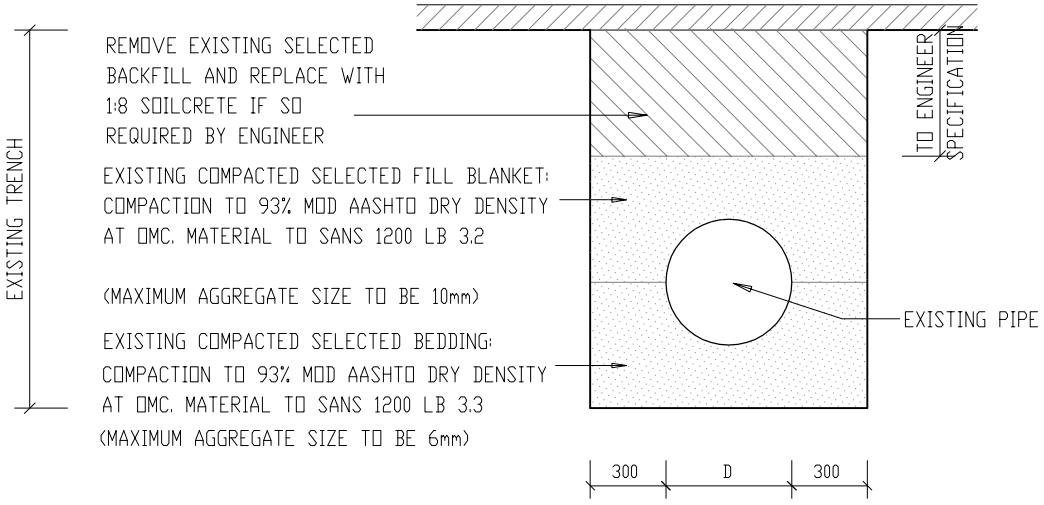

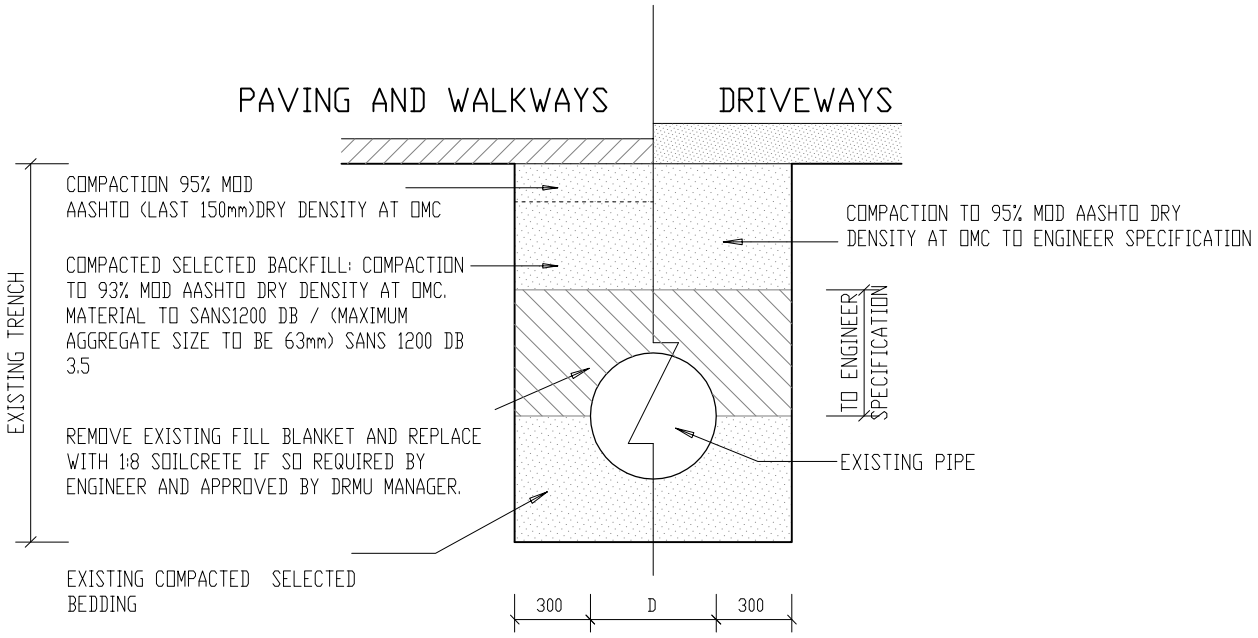

TRENCHING, BEDDING AND BACKFILLING DETAILS OVER EXISTING PIPES
SCALE 1:30

NOTE:
ALL BEDDING SURROUND AND BACKFILL MATERIALS SHALL AFTER COMPACTION BE LESS PREMEABLE THAN THE IN-SITU SURROUNDING SOIL

DT 14/D

DEPARTMENT OF PUBLIC WORKS Private Bag X65 Pretoria 0001 Tel (012) 337 2000	departmental DIAGRAMMATIC CIVIL ENGINEERING DETAILS FOR DOLOMITIC SOILS	title TRENCHING, BEDDING AND BACKFILLING DETAILS OVER EXISTING PIPES (DIAGRAMMATIC)	scale 1 : 30	date 30-09-2017
			drawing number / type number TYPE NO DT 14/D	